WATERSIDE SHOPS

Tenant Design & Construction HANDBOOK

A Forbes Company Development

WATERSIDE SHOPS
RETAIL TENANTS

TABLE OF CONTENTS **January 2010**

Introduction 3

Acknowledgment.....5

Site/Lease Plans 6

Project Directory.....8

Temporary Utilities and Services 9

Permanent Utilities and Services Temporary 10

Description of Landlord's Work 13

Description of Tenant's Work 15

Store Design Criteria 17

Lighting Criteria.....24

Sign Design Criteria 25

Mechanical, Electrical,Fire Sprinkler and Plumbing Design Criteria 28

Mechanical & Electrical Tabulation Forms 35

Tenant Plan Review 40

Procedures for Construction 45

Tenant’s Affidavit of Inspection & Acceptance.....55

Full Unconditional Waiver 57

Tenant Affidavit.....58

Tenant's Close-Out Process 59

Construction Details.....60
TD-1 thru TD-x
MEP-1 thru MEP-x
TFC-1 thru TFC-25

WATERSIDE SHOPS
INTRODUCTION

Waterside Shops originally built in 1992 redesign required a metamorphosis of building architecture as well as the common mall environment to establish it as the regions preferred destination of choice for fashion retail and dining.

Our team developed a planning and design strategy to improve the property and enhancing the shopping/ entertainment environments with first class architecture. With mall renovations and expansions completed on 2005, the overall ambience now reflects a clean, engaging, highly sophisticated shopping, dining, and entertaining environment. The exterior new valet area has been made identifiable with four 24 foot high, support columns with reticulated leaf patterns support translucent glass canopies 14 feet above the walkway.

At night, the entries and landscaping come alive with a luminous glow from well placed lighting. As the guest proceeds through the entry “portals”, the existing columns supporting the continuous “interior” canopy have been re-clad as round columns. A new ceiling drop is provided on the entire interior perimeter of the store front areas where flat ceilings exist. The entire interior common area featuring water and landscaping has been transformed into an organized, formal, beautiful new setting. The new design increases the guest’s ability to see across the common space to storefronts and to be engaged in the entire space’s activities.

A new “events” patio area is now identified by 14 foot high round columns that support an open canopy and special

lighting. When there are no special event, the patio is furnished outdoor furniture and patio umbrellas for everyday casual use.

A significant architectural element tying the West entry and the East entry and unifying the common area is a 550 foot curved, 30 inch high, 48 inch wide ledge rock stone wall. The wall is penetrated at strategically located cross-over points in the common area and provide for the organization of seating, landscaping and custom awning canopies. The wall is also a device that features water “scuppers”, providing water flow to the central common area water feature. On top of the wall are twelve beautifully crafted over sized urns designed by the architects. They feature twelve months of nature in abstract art representing all four seasons. A Royal Palm Promenade creates strong identification to the new retail shops. These new shops also have new entry identification at the northwest corner of the property. The Royal Palms, special water features, and custom designed lattice canopies provide for a comfortable and inviting environment to this renewed central area.

WATERSIDE SHOPS

ACKNOWLEDGEMENT

The criteria stated herein constitutes all agreements between Landlord and Tenant regarding the design criteria and construction procedures for the Premises.

It may not, however, assess responsibility for work or costs of such work provided by Landlord and/or Tenant as such issues are addressed in the lease between Landlord and Tenant.

Nondisclosure of such information, within this Tenant Handbook, shall in no way relieve the Tenant from responsibilities set forth in the lease between Landlord and Tenant.

WATERSIDE SHOPS

SITE PLAN

WATERSIDE SHOPS

LEASE PLAN

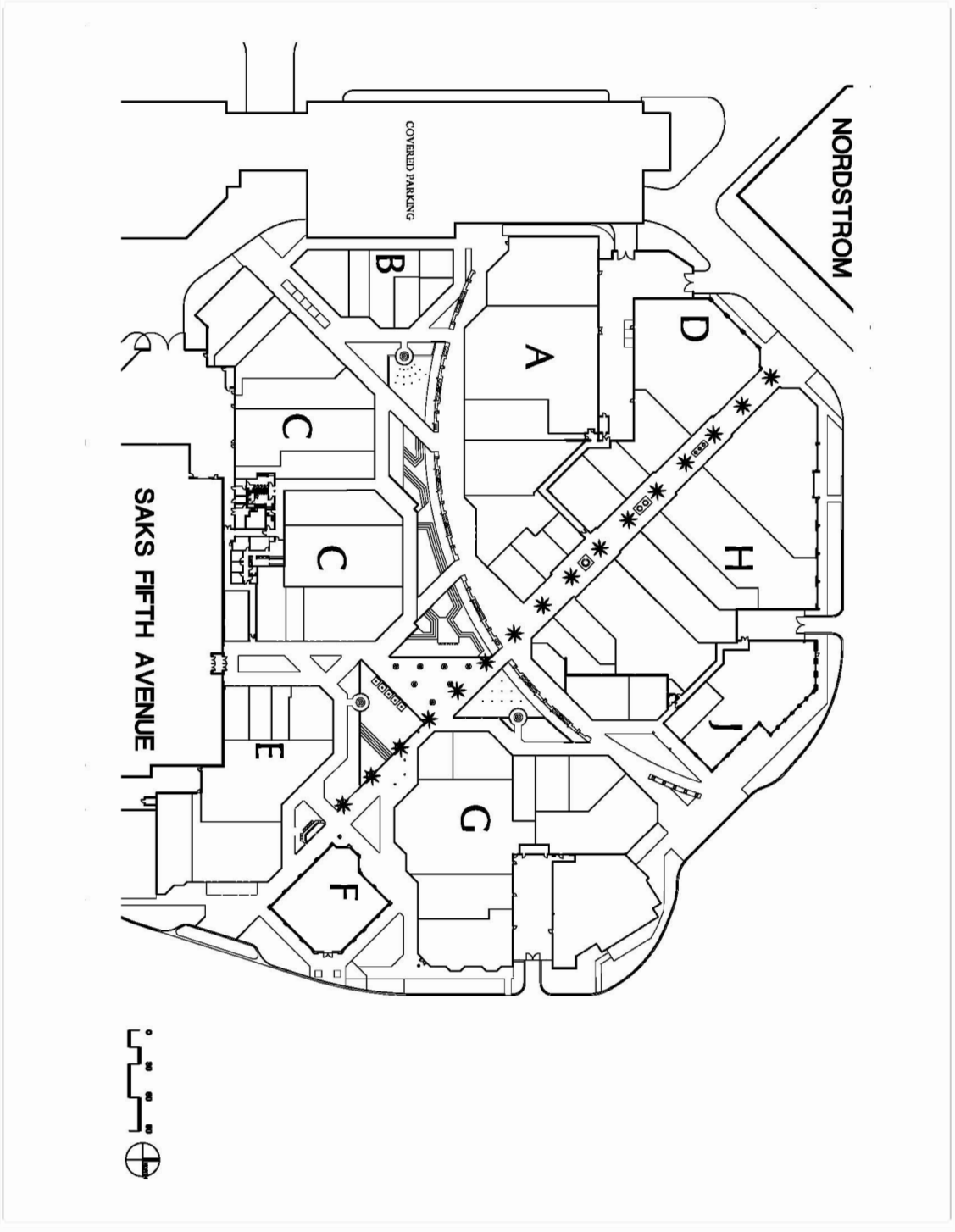

WATERSIDE SHOPS
PROJECT DIRECTORY

TENANT COORDINATION CORPORATE
The Forbes Company
100 Galleria Officentre, Suite 427
Southfield, Michigan 48034
(248) 827-4600

MALL MANAGEMENT
5415 Tamiami Trail North
Naples, Florida 34108
(239) 598-1605

TENANT REVIEW ARCHITECT
Jon Greenberg & Associates
29110 Inkster Rd., Suite 200
Southfield, Michigan 48034
(248) 355-0890

TENANT REVIEW M.E.P. ENGINEER
Potapa-Van Hoosear Engineering, Inc.
47810 Van Dyke
Shelby Township, Michigan 48317
(586) 997-0922

COLLIER COUNTY
2800 N Horseshoe drive
Naples, Florida 34104
(239) 403-2400
(239) 403-3266 fax

Building Permits	(239) 403-5518
Building Zoning	(238) 403-2400
Building Inspectors	(239) 403-2406
Fire Marshall	(239) 403-2498

HEALTH DEPARTMENT - COLLIER COUNTY
2800 N Horseshoe drive
Naples, Florida 34104
(239)403-2499

Hotel/Restaurant Inspections	(239) 403-2499
Health Department	(239) 403-2499
Sanitary Inspections	(239) 403-2499

TEMPORARY UTILITIES AND SERVICES

DURING CONSTRUCTION

ELECTRIC

During construction, Tenant's are to utilize the existing meter if possible for electrical service. Tenant shall request, in writing, permission to connect temporary lines at the power source for service to its premises if existing service is not available. The Tenant is responsible for conductors to Tenant premises, meter, meter box, step-down transformer and panel boards.

TOILET

Public rest rooms may not be used by trades. Tenant Contractors must provide a toilet room within the space in which they are working on.

TELEPHONE

Tenant Contractor must make arrangements with Bell South for construction phone service in Tenant space.

WATER

Water will be available during construction from Tenant's branch line and must be connected by Tenant's Contractor. Tenants and Tenant Contractors are prohibited from using any other temporary water source.

TRASH

Each Contractor is responsible for removal of all construction debris and trash daily from the Tenant space. All trash is to be stored within the Tenant space until carried to your dumpster, in an area designated by the Landlord.

BARRICADES

The Tenant Contractor shall provide a full height continuous duct-proof barrier at the storefront. The Landlord at Landlord's discretion will provide a full height temporary storefront barricade for Tenant's use during construction. Tenant's Contractor is responsible for relocating the barricade a maximum of 3'-0" beyond the lease line. Tenant's contractor shall provide end panel to match, to enclosed the popped out barricade. The Tenant is encouraged to provide graphics on the construction barricade and shall submit graphics for Landlord approval. Tenant's contractor is responsible for removal and disposal of the barricade to a location designated by Landlord.

SECURITY

Landlord may have security on the site; however, Tenant or Tenant's Contractor is responsible for securing Tenant's space during construction. Tenant shall furnish a key to the Landlord for access to Tenant's premises in the event of an emergency.

PARKING

Parking is available near the Center for all Tenant Contractors and construction related vehicles as directed by Landlord. Parking within the service court is prohibited. All deliveries of equipment, supplies and materials must be arranged through the Landlord.

PERMANENT UTILITIES AND SERVICES

AFTER TENANT IS OPEN FOR BUSINESS

ELECTRIC

Description of Landlord/Tenant Work
Landlord will furnish a conduit from meter room to premises.

Tenant will furnish and install conductors from the meter room to Tenant's premises.

To Set Up Service
Florida Power & Light
(800) 375-2434

Billing
Florida Power & Light (Monthly)
General Mail Facility
Miami, Florida 33188

WATER, SEWAGE AND FIRE PROTECTION

Description of Landlord/Tenant Work
Landlord will furnish water supply mains for domestic water and sewer tap-in for all Tenants.

Landlord will furnish fire protection stub to all Tenant spaces which is connected to Landlord's Central Processing Unit to monitor activation of the system.

To Set Up Service
Mall Management
(239) 598-1605

Billing
By Landlord - Monthly

PERMANENT UTILITIES AND SERVICES

GAS

Description of Landlord/Tenant Work
It is Tenant's responsibility to contact Landlord to determine if gas is available in Tenant's area of the Mall and secure Landlord's approval to use gas in this area.

All costs for meters, regulators, venting and gas lines to Tenant's space are by Tenant. Tenant must obtain Landlord's approval, in writing, regarding allowable route of gas lines.

To Set Up Service

Billing
Monthly

TELEPHONE

Description of Landlord/Tenant Work
Landlord will provide a telephone backboard with conduit and pull string from Landlord's central backboard to Tenant premises.

Tenant is responsible for arranging with Bell South Telephone Company for telephone cable from the Landlord's telephone backboard to and within the Tenant space.

To Set Up Service
Sprint
The Gateway
2174 Tamiami Trail North
Naples, FL 34102
(800) 339-1811 for 1-4 line
(800) 800-7141 for over 5 lines

Billing
Sprint – Monthly

PERMANENT UTILITIES AND SERVICES

TRASH

Description of Landlord/Tenant Work
Landlord will provide compactors in designated areas. All trash must be stored within the Tenant space until carried to and placed in the compactors by the Tenant. The compactors will be maintained by a contractor employed by Landlord.

To Set Up Service
Sunshine Recycling
Contact-Rory
(239) 980-1767

Billing
Sunshine Recycling (Monthly)

SECURITY

Landlord will have 24-hour security personnel at Waterside Shops, however Tenant is responsible for securing Tenant's space.

WATERSIDE SHOPS
DESCRIPTION OF LANDLORD'S WORK

PARKING AREAS AND ROADS

Hard surfaced, drained, lighted, striped and landscaped parking areas. Access roads having directional signs and such traffic controls as may be necessary; service areas; walkways to building entrances.

BUILDING

A complex of retail store buildings facing open air malls of exterior design an materials as determined by Landlord's Architect.

Frame: A structural frame of steel and concrete, foundations and roof deck designed to support a live load of (on grade) slab-100 lbs. per square foot.

Roof: Standing on steel deck seam metal roofing system (R-19) or a single ply membrane over rigid insulation on metal deck (R-19) live load of 30 lbs per square foot. (See LOD for roof type)

INTERIOR OF COMMON AREAS

Public Areas: Open air, lighted malls, courts, entry areas and public rest rooms.

Service Areas: Lighted, fire sprinkled, concrete floors and fire-rated walls; service and exit corridors, stairs, ramps and service elevators, project equipment storage areas, janitor's closets, project offices, security office, cleaning equipment rooms, electric and valve rooms, utility and telephone closet distribution rooms and all other areas and facilities used in the maintenance and operation of Waterside Shops.

Neutral Piers: Piers of uniform shape, width, depth and materials as designed by Landlord's Architect will be provided for height of storefront between adjoining areas, to secure a separation which will assure clarity of materials and treatment.

UTILITIES

The following utilities will be provided by Landlord at or near the premises.

1. 4"- Sanitary sewer stub.

2. 3/4" - valved domestic cold water stub.

3. A minimum of 3" - fire protection sprinkler system stub.

4. Electrical metering cabinets or metering switchboards provided within electrical distribution rooms. Meter cabinets shall include meter socket and main disconnect means (208Y/120V, 3PH, 4 Wire, 60 HZ). Tenant shall make arrangements with electric utility for meter installation.

5. Up to a 2" - Empty electrical conduit and pull string from central meter room to the Premises.

6. Central telephone distribution boards with empty conduit system with pull string, one inch (1") diameter from central area to the Premises.

INTERIOR OF PREMISES

Demising Partitions:

1. Landlord will erect metal stud framing for one-hour fire-resistant partitions separating the Premises from adjacent premises. Such stud framing shall extend from the floor slab of the Premises to the underside of the structure above.

2. Landlord will erect metal stud framing and one layer of five-eighths inch (5/8") fire code gypsum board on corridor side of one-hour fire-resistant partitions separating the Premises from adjacent service/exit corridors and Mall service spaces to the underside of the floor or roof structure above.

Exterior Walls:

1. Wall(s) Above Grade: Masonry, steel and/or other building materials.

Floors:

1. First Floor: Existing four inch (4") concrete slab poured by previous tenant on compacted granular sand fill, +/- ½" below Mall finish floor elevation. Tenant must field verify the floor slab condition and make repairs as needed.

Ceilings: Exposed underside of floor deck and/or roof deck above with concrete and/or steel framing. Minimum height below all ducts, pipes, framing, etc. shall be twelve feet zero inches (10'-6").

WATERSIDE SHOPS
DESCRIPTION OF TENANT'S WORK

GENERAL

Tenant, at its sole cost and expense, shall perform all work required to complete the Premises to a finished condition ready to conduct business therein. Tenant's work shall conform to criteria, procedures and schedules as set forth in, the Tenant Design and Construction Handbook and the Construction Exhibits in the Tenant's lease.

All of the work performed for the purpose of the Lease shall be deemed to be improvements made to the Premises by Tenant.

Tenant's work shall conform to procedures and schedules as set forth in this Handbook and shall include without limitation the following:

1. Store Design Drawings, Construction Drawings and Specifications set forth in this Handbook and the Lease.

2. Construction work in accordance with the requirements set forth in this Handbook and the Lease.

3. Notwithstanding anything to the contrary contained in the Lease or in this Handbook, Tenants leasing premises which have heretofore been improved by prior occupants of such premises (a) shall accept such premises in their "as is" condition, and (b) shall not utilize any existing improvements in such premises without Landlord's Representative's express written approval.

CRITERIA

The criteria and/or specifications as set forth herein represent minimum standards for the design, construction and finish of the Premises by Tenant.

Jurisdiction and Codes: The Project is being developed in and under the jurisdiction of the City of Troy, Oakland County, Michigan. All design and construction work shall comply with all applicable statutes, ordinances, regulations, laws and codes.
http://www.colliergov.net

Permits and Approvals: Simultaneous to the application for building and other permits Tenant shall obtain Landlord's written approval of Tenant's plans and specifications. Upon the commencement of construction, building and other permits obtained by Tenant shall be posted in a prominent place within the Premises. Landlord's written approval shall be obtained by Tenant prior to the undertaking of any construction work not explicitly shown on said Working Drawings and Specifications. Landlord's approval of the foregoing shall not constitute the assumption of any responsibility by Landlord or Landlord's Architect for the accuracy or sufficiency thereof, and Tenant shall be solely responsible therefor.

WATERSIDE SHOPS

DESCRIPTION OF TENANT'S WORK

Design Loads: Structural system has been designed to carry the following live loads, and loading imposed by any Tenant's Work on a temporary or permanent basis shall not exceed the following allowable live loads:

On-grade slabs: 100 lbs. per sq. ft.

Standard Project Details: As issued by Landlord's Architect and as they pertain to Tenant's work, as it interfaces with the mall construction shall govern with respect to such work. Such details shall be incorporated into the Working Drawings and Specifications for the Premises.

Materials: Only new, first-class materials shall be used in the construction of the Premises.

Space Layout: A Lease Outline Drawing and/or As-built drawings of the previous tenant for the Premises will be furnished to Tenant's Architect by Landlord. Same shall indicate by floor plan the dimensions of the Premises, column locations and sizes, doors, if existing, underground and overhead utility lines and fire sprinkler source. A section drawing indicating height clearances and any special conditions affecting Tenant's construction, as well as the Standard Project Details, will similarly be furnished to Tenant's Architect.

Field Conditions: Tenant shall verify conditions pertaining to the Premises prior to and after commencement of construction of the Premises. Tenant shall coordinate Tenant's Work with the work of Landlord and others as well as existing conditions occurring above or below the Premises.

Non-Interference with Other Work: Tenant shall perform all of its work in such a manner as will not interfere with, impede or delay Landlord's work or the work of other Tenants. Tenant shall not perform any construction activity resulting in excessive noise, dirt or dust, which would be disruptive to the Shopping Center. Any activity which Landlord deems disruptive must be accomplished during hours the Shopping Center is not open to the public. Landlord reserves the right to order an immediate halt to any work which, in Landlord's sole discretion, is disruptive to the operation of the Center. All work preformed within the Premises but be Union labor.

STORE DESIGN CRITERIA

Specific Limitations:

1. Tenants are required to use a variety of complementary materials. No rough sawn woods, plaster, gypsum board, mirror, plastic, laminate, vinyl or simulated materials will be permitted as storefront material. Large unrelieved areas of continuous opaque materials or tile are not permitted. Tenants having extensive storefront lengths (i.e., corners or at side corridor locations) are required to articulate these surfaces with show windows, architectural detail or with visual access into the sales area. No uninterrupted surfaces of the same material at the storefront wall areas will be permitted in excess of fifty (50) square feet and/or twenty percent (20%) of the total frontage along the lease line, whichever is less.

2. Where Landlord Representative deems appropriate, Tenant shall furnish and install ceiling and flooring material identical in quality, color and pattern to the canopy ceiling and common area flooring materials to Tenant's storefront construction. The relationship of Landlord's and Tenant's material should reinforce the store configuration and de-emphasize the lease line. When deemed necessary by Landlord, Tenant will be required to remove portions of common area floor tile and install whole tile to the Tenant's storefront.

3. The full height available must be utilized in the store design.

4. Tenants storefront and storefront glass shall be designed to comply with local hurricane wind & impact requirements. Hurricane shutters are not permitted.

5. No bi-fold doors, sliding doors, slatted wood or vinyl roll-up doors or rolling grilles are allowed; no chain link type security grilles are allowed; glass or architectural swinging doors are required (all door swings must fall behind lease line).

6. The storefront opening shall not exceed 6'-0". Said opening shall not be closer than three feet (3'-0") to the neutral pier. Storefront shall be supported from the floor slab only and not suspended from the Mall structure, although lateral bracing of the Tenant storefront to the Mall structural members is permitted.

7. No continuous graphics is allowed on storefront glass.

8. No charge card decals, logos or other descriptive materials of any nature shall be affixed to storefronts.

9. No exposed or unfinished construction or non-industry standard detailing shall be visible in any part of the Premises which is accessible to customers.

10. No light fixtures utilizing directly exposed fluorescent lamps are allowed in the

sales area. The use of accent lighting is encouraged. No fluorescent lighting is allowed in the area from the lease line into approximately the first thirty-three percent (33%) of the sales area of the Premises (the "Storefront Zone") unless it is in a cove or recessed down light. When fluorescent lighting is used in non-storefront zones, the fixtures shall be 2' x 2' recessed type with nine (9) cell parabolic lenses or recessed fluorescent downlight.

11. No lay-in ceiling tiles are allowed in the sales area, Storefront Zone or public areas.

12. No plastic plants will be permitted in the storefront, display windows or sales areas.

13. Vinyl tile floors and base are not permitted in the sales area (stock room areas only).

14. Storefront materials shall be selected for aesthetic quality, durability and freedom from maintenance in areas of public contact.

15. Stockroom entrance doors shall be concealed from sales area, via an alcove.

STOREFRONTS

1. Show windows, floors, display platforms, ceilings, walls, signs, entries, doors, glass, metal work, display fixtures and all associated electrical, fire sprinkler, heating, ventilating and air-conditioned equipment shall be considered Storefront Zone work. Materials consistent with the storefront, such as hard surface flooring, low voltage lighting, incandescent lighting, recessed track lighting, mono-point fixtures, concealed style fire sprinkler heads, linear diffusers and upgraded finishes should be used extensively in the Storefront Zone and sales area.

2. Architectural elements such as awnings & vitrines of the storefront may project beyond the lease line, for main mall Tenant’s up to twelve inches (12"). All items projecting beyond the lease line may not be closer than three feet (3'-0") to the neutral piers and must be back to the lease line a minimum of eighteen inches (18") below the Mall bulkhead. Landlord approval must be given for all items which project beyond the lease line and Landlord may elect not to permit any projection. Tenant’s located in the end and intermediate courts (the oval courts) are not permitted to pop-out and must follow the radial lease line. The out-swing of entrance doors may not project beyond the lease line.

3. Tenant is required to develop a three-dimensional storefront configuration both vertically and horizontally independent of Tenant's lease line. Where Landlord's Representative deems appropriate, Tenant shall furnish and install ceiling and flooring material identical in quality, color and pattern to the Mall ceiling and flooring materials to Tenant's storefront construction. The relationship of

Landlord's and Tenant's materials should reinforce the store configuration and de-emphasize the lease line. When deemed necessary by Landlord, Tenant will be required to remove portions of Mall floor tile and install whole tiles to the Tenant's storefront. Tenant shall furnish and install ceiling and flooring material identical in quality, color, texture and pattern to the Mall ceiling and flooring materials. The relationship of Landlord's and Tenant's materials should reinforce the store configuration and de-emphasize the lease line.

4. See Typical Project Details for required storefront control joint details.

5. All storefront work requiring structural support, shall be floor supported and braced at their head sections. No element of Tenant's storefront may be supported by Landlord's ceiling, second floor or roof structure. Storefront elements may be laterally supported from the Mall structural members only.

6. Tenant shall provide a smoke barrier from top of Tenant storefront to underside of floor or roof deck above. Said barrier shall be constructed of one layer of five-eighths inch (5/8") fire code gypsum board and fire taped.

7. All Tenants are required to identify their Premises with one sign provided by Tenant.

8. The full height available must be utilized in the store design (see LOD and/or existing tenant drawings for storefront height).

9. Storefront must display a high percentage of transparency and have full height glass where feasible.

10. All glass is required to be safety glass and must be tempered or laminated and sized in accordance with accepted industry standards and within City of Troy building code requirements. All exposed edges must be polished or honed with space between adjacent panes of glass not to exceed one-quarter inch (1/4"). All corners are to be mitered with spacing between panes not to exceed one-quarter inch (1/4"). Exposed metal glazing systems are not permitted. Metal or wood clips are required for lateral stability on large panes of glass, and designed to be integrated with the Tenant's storefront. Plastic glass clips are not permitted. Glass suspension systems on specially designed mechanical fasteners are acceptable. Silicone butt joints are not permitted.

11. Tenant is required to develop a visual distraction line within large glass areas at the storefront. Sandblasting, gold leaf and etched glass are encouraged.

12. Allowable storefront materials are:

- Marble, granite, limestone or other cut stones approved by Landlord's Representative.
- Smooth finish painted or stained hardwoods. Rift cut hardwood veneers are encouraged. Rotary cuts are not allowed.
- Porcelain tile.
- Stainless steel, brass, bronze or aluminum all with brushed finish.
- Glass, spandrel glass and sandblasted glass.
- Certain other materials subject to Landlord's approval.

13. Mechanical devices such as entry locks and/or controls, etc., shall not be visible from the enclosed Mall.

14. Electronic surveillance or other shoplifting detection devices and security systems shall be incorporated and integrated within Tenant's storefront design not mounted to the backside of the storefront. Free-standing "boxes", "columns" and similar equipment are not permitted.

Flooring:

1. Tenants located on grade shall provide a new concrete slab of a minimum thickness of four inches (4"). Tenant shall provide additional sand fill and/or remove excess as required and compact to 98% modified proctor. Tenant shall provide soil poison to the sand fill by a licensed termite control contractor prior to installation on concrete slab. Tenant shall install a vapor barrier (minimum 0.8 mill visqueen) and concrete having minimum strength of four thousand (4,000) pounds per square inch with a WWF 6 x 6 W1.4 x W1.4 welded wire mesh, dowel to existing slab & finished as required to receive finish floor material.

2. Tenants located on a two inch (2") recessed supported slab shall be required to provide a concrete topping over an isolation membrane or other approved fill, if necessary, to bring their finished floor material level with the enclosed Mall finish floor.

3. 33% of the sales area is to be hard flooring. This area is to start at the storefront and show windows and is to extend into the sales area. Extensive use of marble, stone, porcelain ceramic, wood and other exotic materials is encouraged in conjunction with carpet in the sales area. Vinyl base is not permitted in the sales area or at the storefront. Vinyl tile may be used only in stock or service areas, not

visible from the sales area. A metal angle is to be used in lieu of reducer strips where required to transition between hard flooring and carpet. (See Typical Project Details.)

4. All floors in stock area must be vinyl composition tile, vinyl floor covering or carpet or painted.

5. Finish floor elevation at all store entrances shall be at the same elevation as the enclosed Mall floor. Carpet must be recessed flush adjacent to all hard surfaces. Reducer strips are not permitted in areas visible to the public.

6. In all upper level rest rooms, kitchen, food preparation, dish washing and similar areas, Tenant shall furnish and install a waterproof membrane on Landlord's furnished floor slab beneath finished floor material. Perimeter edges of membrane shall extend vertically a minimum of four inches (4"). Tenant shall not cover the membrane until its installation has been visually inspected and approved by Landlord's Representative. Tenant shall provide floor drains with trap primer within all such areas and raised thresholds at all floor transition points. Tenant is encouraged to use sheet vinyl flooring in employee toilet rooms with the sheet extending seamless four inches (4") up the wall as a base.

7. All floor penetrations shall be fire stopped to maintain the slab rating and shall be made watertight.

Ceilings:

1. Sales and stock area ceilings shall be noncombustible suspended on an approved metal suspension system and capable of supporting light fixtures, mechanical openings, decor and other attachments.

2. Suspension of ceiling systems other than from structural steel is not permitted. Connection to Landlord's metal deck is not permitted.

3. Access panels, where required for Landlord and/or Tenant systems, shall be frameless and shall be made as inconspicuous as possible, hidden from view from the enclosed Mall. Tenant shall provide direct access to Landlord's valves, sensors and other mechanical equipment which may require service as directed by the Landlord's Representative on site or the City of Troy.

4. Ceilings must be gypsum wallboard, taped and painted or plaster finish. The continuity of vertical storefront materials onto ceiling areas at storefront is required where determined feasible by Landlord's Representative.

5. Ceilings required as infill between the lease line and storefront shall match the Mall material, texture and color.

Exit Doors:

1. When applicable, fire-rated door and frame from the Premises to service corridor is required. Tenant to provide painted (per Mall specification) door with frame, closer, hardware, locksets and installation including cutting, patching, extending base and chair rail detail to the jams, corner guards (see Typical Tenant Details) or other work required to penetrate Landlord's demising partition. Tenant's service door must be installed in a recessed vestibule by Tenant and painted to match the service corridor. A sprinkler head shall be provided by Tenant within the service door recess.

2. Tenant shall provide painted floor striping in caution yellow or red vinyl tile through the stockroom for exiting. Said indication must be in width per egress requirements.

3. Stock and/or service room doors must be concealed in the general store design and must utilize automatic closure hardware.

4. Tenant shall provide and install, on the corridor side of each of the Tenant's service doors to the Premises, a store identification sign. Sign shall be two inch (2") high black vinyl die-cut capital letters with Tenant name and space number in Helvetica Medium type centered on all doors with the top of the sign at five foot six inches (5'-6") above the finished floor.

Finish Hardware: Commercial grade finish hardware, labeled where required, shall be used throughout. All doors shall have 1-1/2 pair butts, wall or floor stops, kick plates, lock sets and/or push-pull plates, as required. All exit doors shall be equipped with a cylinder lock.

Miscellaneous:

1. Field conditions:

   - Tenant shall inspect, verify and coordinate all field conditions pertaining to the Premises from prior to the start of its store design work and the commencement of its construction. Any significant adjustments to the work arising from field conditions not apparent on drawings and other building documents shall receive written approval of Landlord prior to start of construction.

   - Following the installation by Landlord of metal stud framing defining the Premises, Tenant shall verify the accuracy of said installation and shall immediately advise Landlord of any discrepancies. Failure to notify Landlord shall be deemed an acceptance by Tenant of said installation and layout.

- Landlord shall have the right to locate, both vertically and horizontally, utility lines, air ducts, flues, refrigerant lines, chilled water lines, condenser water lines, vent lines, drains, clean-outs, sprinkler mains and valves, support columns and such other facilities.

- Landlord's right to locate facilities within the Premises shall include the facilities required by other Tenants. Landlord shall have the right to locate mechanical and other equipment over the ceiling or on the roof over the Premises.

- The integrity of the fire rating of demising partitions cannot be violated, i.e., Garcy Studs or standards for recessed brackets and hang rods.

2. Any wood used in construction framing or finish material shall conform to the Standard Building Code and N.F.P.A. Code requirements pertaining to combustible materials. Tenant shall submit to Landlord certification stating that all wood has been treated and conforms to all applicable Building Code requirements.

3. All sprinkler heads must be quick response, fully recessed type with white factory paint finish or color to match adjacent surfaces. All sprinkler heads spacing and flow density shall conform to Landlord's Insurance Underwriter's criteria.

4. Toilet room facilities shall be provided for employees within the Premises. Tenant shall provide a minimum of one (1) handicapped toilet room within the Premises. Toilet room(s) shall meet all applicable handicap codes. Tenant shall be responsible for verification of employee and customer toilet requirements as to number of fixtures and size of facilities with Collier County and the State of Florida. Cost of connecting to Landlord supplied sanitary sewer stub shall be the responsibility of Tenant.

5. Stairs, ramps, conveyors and dumbwaiters, if allowed by Landlord, shall be of a width, material and number as required by local codes.

6. All framing members shall be metal/steel.

Walls:

1. Tenant shall provide one layer of five-eights inch (5/8") fire code gypsum wallboard on Tenant's side of demising partitions from the floor slab up to the underside of metal deck/structure above.

2. Tenant shall provide one layer of five-eighths inch (5/8") of fire code gypsum board on the Tenant side of one-hour fire-resistant partitions separating the Premises from service/exit corridors and Mall service spaces from the floor slab to the underside of the metal deck/structure above with continuous fire stopping.

LIGHTING CRITERIA

STORE LIGHTING DESIGN CRITERIA

1. Tenant is responsible for all lighting within the Premises and Landlord strongly encourages the use of energy efficient lighting.

2. All storefront and internal reflected ceiling plans and specifications shall indicate all illuminating devices and be submitted to Landlord for approval. Fixture cuts of all fixtures must be submitted for review and approval.

3. For storefront illumination, the use of decorative type lighting such as chandeliers, pendant, wall units or clean-type glitter strips are permitted only if the location and fixture is approved by Landlord. No strobe, tivoli strip, spinner or chase-type lighting shall be used.

4. No lighting fixtures shall be installed by Tenant outside the Premises.

5. General store lighting shall be glare-free type fixtures. If fluorescent lighting is used, it shall be 2' x 2' recessed and the shielding shall be 3" deep (minimum) nine (9) cell alzak aluminum parabolic louvers with clear finish or as otherwise approved by the Landlord. Recessed fluorescent downlights may also be used. No acrylic, polystyrene, polycarbonate or similar lens shall be used in areas visible to the public.

6. Incandescent pendant units may be used for general lighting only if Tenant has established an identity based on this theme or motif.

7. Low voltage lighting, recessed track and/or mono-point fixtures are encouraged for high impact on merchandise and energy efficiency. Track lighting in the Storefront Zone must be recessed or concealed. Eyeball light fixtures are not permitted in the Storefront Zone. No exposed fluorescent light fixtures are allowed in the sales area, including perimeter cornice lighting and display fixture lighting. The use of accent lighting, indirect cove lighting and decorative incandescent lighting is encouraged.

8. All enclosed storefront display cases must be adequately lighted and ventilated. Direct visual exposure of any light source is prohibited, all light sources must be concealed from view including those seen from the second level of the Shopping Center.

SIGN DESIGN CRITERIA

TENANT SIGN CRITERIA

1. Tenant will be required to identify the Premises by one (1) sign. The wording of same shall be limited to Tenant's trade name. The use of slogans, logos or descriptive language is not permitted.

2. Only the storefront of the Premises facing the enclosed Mall and/or court shall be identified by a sign. The furnishing and installation of a sign and the cost incurred shall be the responsibility of Tenant. Sign construction is to be completed in compliance with the instructions, limitations and criteria established herein. The storefront sign illumination, if any, shall be controlled by a time clock.

3. Tenant identification signage shall relate to storefront design and location in the enclosed Mall. Tenant's store designer is encouraged to develop innovative signage design in harmony with the store merchandise, interior design character and storefront material selections. Although previous signage practices of Tenant will be considered, they will not govern signs to be installed.

4. Allowable high quality design sign types are:

   - Sand-blasted sign on glass.

   - Back illuminated individual letters with white plexiglas backer panel.

   - Interior illuminated individual letters with an opaque overlay covering seventy-five percent (75%) of the letter's face.

   - Stencil cut back illuminated panel in three dimensional harmony with store design with an opaque overlay covering seventy-five percent (75%) of the letter's face.

   - Stainless steel or painted metal letters, pin mounted.

   - Non-illuminated signs of high quality.

   - Signage employing colored letters must be non-illuminated.

5. Interior signage is subject to Landlord's approval and requires submittal of shop drawings.

6. Coloration and materials of storefront signs are to blend with and be consistent with other store materials, store decor and not be overly contrasting with the surface it is mounted on.

7. Sign brightness not to exceed one hundred (100) lamberts.

8. Prohibited Types of Signs or Sign Components are:

- Red signs.
- Moving or rotating signs.
- Individual internally illuminated channel letter signs with plexiglass faced letters.
- Signs employing moving or flashing light or noise making devices and components.
- Signs employing exposed raceways, ballast boxes or transformers.
- Signs with weep holes or light leaks.
- Signs exhibiting the names, stamps or decals of the sign manufacturer or installer.
- Signs of box or cabinet-type employing transparent, translucent or luminous plastic background panels, subject to Landlord's approval.
- Signs employing luminous vacuum formed-type plastic letters.
- Cloth, paper or cardboard signs, stickers, decals or painted signs around or on exterior surfaces (including interior and exterior surfaces of doors and/or windows), of the Premises.
- Signs, letters, symbols or identification of any nature painted directly on surfaces exterior to the Premises.
- Signs employing unedged or uncapped plastic letter(s) with no returns and exposed fastenings.
- Signs employing exposed neon.
- Rooftop signs.
- The name “Waterside” are not permitted in Tenant's sign.

9. Location: Sign letters must be located in such manner that they are not closer than six inches (6") to the top of Tenant storefront nor closer than thirty-six inches (36") to the uniform neutral piers between stores.

10. Size: Depth of letters shall be such that the face of same does not extend more than four inches (4") from face of the storefront wall. Height of sign letters or components shall not exceed 12”. Depending on the length of store name, letter style, and storefront design, Landlord's Representative shall have the right to reduce the maximum letter height and overall length of Tenant's sign.

11. Weight Limitation: Storefront valance materials and Tenant's sign, which are suspended from the storefront framing, shall be entirely self-supporting. The building's structure and/or Mall soffit may not be used for suspension of Tenant's storefront or sign.

12. Approval of Store Design Drawings or Working Drawings and Specifications for the Premises does not constitute approval of any sign work. Tenant must submit one (1) hard copy or email a set of Drawings & Specifications including samples of material and colors, all for its proposed sign for Landlord approval prior to fabrication of said sign. The drawings shall clearly show location of sign on storefront elevation, graphics, color and construction and attachment details.

13. As soon as possible after receipt of the Sign Drawings, Landlord's Representative shall return the sign drawings marked approved, approved as noted or not approved via fax or e-mail. If, upon receipt of Sign Drawings bearing Landlord's Representative's comments, Tenant wishes to take exception thereto, Tenant may do so in writing, within ten (10) days from the date of receipt of such Sign Drawings. Unless such action is taken, it will be deemed that all comments made by Landlord's Representative on the Sign Drawings are acceptable to and approved by Tenant.

14. Tenant’s sign contractor shall submit a $2,500 refundable deposit and a certificate of insurance name the Mall as an additional insured to Mall Management prior to installation of any signage. The signage contractor shall contact Mall Management prior to installation for a pre-construction meeting.

MECHANICAL/ELECTRICAL/PLUMBING/ FIRE SPRINKLER DESIGN CRITERIA

MECHANICAL DESIGN CRITERIA

1. Tenant, at his sole cost and expense, shall prepare Design, Working Drawings and Specifications for, and shall initially construct and/or provide all heating, ventilation, exhaust equipment, controls, ducts, insulation, and all structural, plumbing and electrical work related thereto. Each Tenant shall provide its own Landlord specified VAV box and individual system proceeding from the medium velocity air-conditioning ducts, and the toilet exhaust ducts provided for it. All equipment shall bear U.L. labels. All equipment shall be installed to operate properly with the Landlord's building automation system, including smoke control and night setback.

GENERAL REQUIREMENTS

1. Central air-conditioning system will provide 56° F. 3° F. air with outside temperature at 91° F. db and 76° F. wb.

2. Tenant heating equipment shall be designed to maintain hereafter defined minimum inside dry bulb temperatures when outside temperature is 0° F. db, and average wind velocity is 15 MPH.

3. Cooling shall be designed for a maximum of 8 watts per square foot total electrical heat producing load (lighting, equipment and power).

4. Tenant shall furnish and install standard low velocity air distribution system throughout the Premises beyond Tenant's VAV. Tenant shall provide manual dampers at all connections to Landlord's main ductwork. Tenant shall provide medium velocity ductwork between Landlord main and Tenants VAV box.

5. Ductwork shall be fabricated of galvanized sheet metal and be designed and constructed in accordance with the latest ASHRAE and SMACNA Standards. Fiberglass ductwork is not allowed.

6. Tenant's supply air ductwork shall be insulated, and all ductwork shall be installed in concealed space above ceilings. Space between ceilings and structure shall be used as a return air plenum unless otherwise indicated by Landlord. Tenant shall provide ceiling return air registers or grilles (maximum velocity 400 f.p.m. net).

7. Where the Landlord deems necessary, Tenant will be required to provide a ducted return air system to a charcoal activated or other filtration device. Such device must be above the tenant ceiling with appropriate access panels for servicing.

8. Tenant shall furnish and install all code complying temperature controls and wiring as required per manufacturer's recommendations and/or Landlord's review comments.

9. Quantity of air supplied to the Premises will be verified by Landlord upon review of Tenant's Working Drawings and data tabulation forms.

10. Provide clear access to all equipment.

11. Access Doors and Panels - Access doors no less than 18 inches square shall be installed to inspect upstream sides of coils and filters and either side of dampers. Access doors shall be installed to remove filters. All doors shall be hinged and latched, not screwed or bolted.

12. Flexible duct connectors shall be fire resistant type, installed at locations to isolate the duct systems from the fans or the casings containing the fans along with the fan motors. Flex duct must be accessible and in no greater length than 5'-0".

Heating:

1. The major portion of required Tenant heating will be generated by inherent internal loads, that is, the daytime contribution by people and lighting.

2. Those Tenants affected by external heat losses (exterior walls, doors, windows, etc.) shall install independent electric heat fed from Tenant's power source consisting of the following:

    a. By self-contained thermostatically controlled Electric Unit Heaters installed in the space between ceiling and roof. Unit Heaters shall be designed to maintain a minimum inside dry bulb temperature of 55° F. in this plenum. Thermostat for same shall be set and locked at 55° F.

    b. By self-contained thermostatically controlled Electric Heaters and/or electric baseboard type radiant heaters. Heaters shall be designed to maintain a minimum inside dry bulb temperature of 70° F. in affected space.

    c. Electric re-heat coils. Tenant may at its discretion install an electric heating coil on discharge of each FPVAV box. Coils must be provided with air flow switch and overheat protection.

Ventilation:

1. Central air-conditioning supply system will have available minimum outside air of approximately 0.17 CFM per square foot of floor space. Outside air provided for sales, storage and/or dining areas only.

2. Toilet room shall be exhausted per code. Exhausts shall have a manual balancing damper and duct connection to Landlord's toilet exhaust system. Tenant shall re-balance central toilet exhaust fan as required by Tenant connection. Fan shall be balanced to exhaust a final air quantity equal to the sum of the original fan discharge plus the actual exhaust air quantity from the Tenant space.

Air-Conditioning:

1. Tenant shall install a minimum of one Landlord specified Tenant supplied VAV or FPVAV box and Temperature Control Device Set. Maximum capacity for a single box cannot exceed 2000 CFM at a Noise Control Rating of 35 (NC-35). Temperature Control Device Sets are of the variable volume type complete with electric operator and room thermostat.

ELECTRICAL DESIGN CRITERIA

1. Power available for the Premises is 480Y/277 volt, 3-phase, 4-wire, 60Hz.

2. Tenant's contractor shall provide and install bus plugs complete with fuses, electrical service feeder wiring, and conduits from bus plug to the Premises, metering complete with current transformers and meter wiring. Tenant shall coordinate metering with the Landlord. Landlord shall determine tap location on bus duct and the routing of the conduits complete with wiring from the bus duct plug-in switch to the Premises.

3. Tenant's contractor shall provide all required equipment for Tenant metering, including but not necessarily limited to current transformers, register meters, junction boxes, meter wiring, bus plugs complete with fuses, all required conduits and wiring, and all final connections for a complete installation, ready for operation. Metering shall be arranged for 277/480 volt, three phase, four wire. Current transformers shall be rated for applicable connected load.

   The following Register Meter and Current Transformer shall be utilized by Tenant as applicable:

   P/N 450248, 277/480V, 3-Phase, 4-Wire Register Meter
   P/N 2DRL-101, 100:5-Amp, Solid Core Current Transformers (set of three)
   P/N 2DRL-201, 200:5-Amp, Solid Core Current Transformers (set of three)
   P/N 5RL-401, 400:5-Amp, Solid Core Current Transformers (set of three)
   P/N 5RL-601, 600:5-Amp, Solid Core Current Transformers (set of three)
   P/N 76RL-801, 800:5-Amp, Solid Core Current Transformers (set of three)

P/N 76RL-102, 1000:5-Amp, Solid Core Current Transformers (set of three)
P/N 76RL-122, 1200:5-Amp, Solid Core Current Transformers (set of three)

Contact: Metering Technologies, Ltd.
3128 Walton Boulevard
Suite 232
Rochester Hills, Michigan 48309
Telephone: 248/559-2330
Mr. John R. Carpenter

4. All bus plug switches, fuses, metering, distribution, panelboard(s), transformer(s), conduit and branch wiring, outlet boxes and all final connections to all electrical devices including mechanical equipment, controls, all miscellaneous systems and all signs shall be the responsibility of Tenant.

5. Panelboard(s) shall be designed for 20% minimum spare ampacity (based on connected load) and 20% spare breaker space. Breakers shall be bolt-on type.

6. Panelboard(s), distribution equipment, and overcurrent devices shall be designed to accept the available fault currents, rated in RMS Symmetrical Amperes.

7. All lighting fixtures, time clocks, lamps, convenience outlets, signs, etc., related conduits shall be the responsibility of Tenant.

8. The service conduit and conductors from the bus duct, through the main disconnect means and to the Premises shall be copper, furnished connected and installed by Tenant. Tenant shall install copper wire sized to service a minimum 100 amp, 3 phase, 4 wire service.

9. Dry type transformer, floor supported within the Premises shall be used for all 208Y/120 volt requirements. Tenant shall provide for adequate ventilation.

10. All wiring systems shall be installed in electric metallic tubing (EMT) including low voltage wiring except where rigid steel conduit is required by applicable codes.

11. Emergency lighting and exit directional signs shall be provided by Tenant per code to illuminate stock and sales areas and rear exit way during power outage. Exit directional signs and emergency lighting shall be battery standby as approved by applicable codes. Batteries may be twin head units in rear areas out of public view. In all public areas battery packs shall be concealed from public view.

12. Circuits serving storefront sign shall be controlled by a time clock switch, located adjacent to the panel serving the signage.

13. Tenant shall coordinate installation of telephone equipment and wiring with Ameritech (telephone company) utilizing backboard and conduit provided by Landlord.

14. Roof mounted television and radio antennas are not permitted. Satellite communication systems are available from specific Landlord approved communication vendors. All cost of said system are Tenant's. A fee to the communication vender(s) may also be imposed by the Landlord.

15. Standards of construction shall conform to the applicable National Electric Code including any local modifications.

16. Romex, "BX" or "MC" cable is not permitted.

17. All equipment shall bear Underwriters Laboratories, Inc. labels.

18. Three (3) phase transformers (dry type) provided by Tenant shall have six (6) standard full capacity tap arrangements. Entire installation within the Premises shall be balanced equally across all three phases.

19. Tenant shall design to a watt density not to exceed eight (8) watts per square foot total connected load as calculated on Tenant's electrical tabulation sheet.

20. Tenant shall provide clear access to all equipment.

21. No combustible materials shall be installed in the ceiling plenum.

22. All equipment and materials installed in plenum ceiling areas shall be approved for the purpose by UL and the applicable code authority (City of Troy).

23. All fuses shall be RK-1 rejection type with time delay rated at 300K amperes RMS symmetrical. Fuse manufacturer and fuse type shall match the mall electrical distribution system fuses.

24. All fluorescent ballast shall be class A sound rating, electronic rapid start type, with not less than 99% power factor, less than 10% total harmonic distortion and less than 6% 3rd harmonics. Fluorescent lamps shall be energy efficient T-8.

25. All fusible disconnects shall be equipped with rejection type fuse clips.

26. Provide all wiring, overcurrent devices, disconnect means, raceways, and all final connections necessary for tenant electric heating equipment and water heating equipment.

27. Provide for all required test equipment and testing of all wiring for shorts, grounds, insulation resistance testing. Submit report to Landlord.

28. Provide identification for all panels, disconnects and transformers using engraved nameplates, white lettering on a black background. Provide typewritten directories under plastic cover for all panel branch circuits. Identify the wiring for all branch circuits using approved wire markers.

29. Provide power factor correction to 95% for all motors 1 HP and greater.

30. Provide all temporary wiring as required within the Premises. Provide all required services, panels, disconnect means, transformers, overcurrent protection. Common area outlets, panels, etc. shall not be used for tenant temporary wiring.

31. No conduits shall be installed in the floor slab(s). Saw cutting the second and third level floor slab is prohibited.

32. Provide UL approved fire seals for all fire rated wall and floor penetrations.

33. Provide all equipment and labor required for installation of smoke detector and associated connection to fire alarm system, in all Tenant exhaust systems when more than 50% of the Tenant supply air is being exhausted. Smoke detector shall be connected to Landlord's annunciator panel by Tenant on a separate fire alarm zone and separate trouble zone.

34. All required wiring connecting and testing to the Landlord's fire alarm and detection system shall be provided by the Tenant at Tenant's expense. If Landlord elects to provide the wiring, connections, and testing, all costs shall be charged to Tenant.

FIRE PROTECTION SPRINKLER SYSTEM DESIGN CRITERIA

1. Provide automatic fire protection sprinkler system for the Premises with connection to the sprinkler system flange stub which will be provided by Landlord.

2. Fire protection sprinkler system, fire extinguishers (type 2-A-10BC) and other equipment within the Premises shall be in accordance with NFPA 13, Landlord's Insurance Underwriter requirements and all applicable codes, including Ordinary Group 2 Hazards, not less that 0.20 g.p.m. per square foot over the most remote 2,500 square foot area, the more stringent of which shall govern. Sprinkler head spacing and flow density shall comply with Landlord's design criteria. The entire

fire protection system for the Project is required to be an interrelated centrally controlled installation and Tenant shall cause a qualified sprinkler contractor to design and install the hydraulically calculated system within the Premises in accordance with said requirements and shall submit to Landlord's Representative plans, hydraulic calculations and specifications for the sprinkler system which have been approved by the Fire Marshall and Landlord's Insurance Underwriter. Approval of the foregoing shall not constitute the assumption of any responsibility by Landlord for the accuracy or sufficiency thereof, and Tenant shall be solely responsible therefor.

3. All sprinkler heads must be quick response heads. Those visible to public must be fully or semi-recessed with white finish or finish to match adjacent surfaces.

Plumbing:

1. Plumbing fixtures and accessories shall be of commercial quality and shall be of water conserving type. Water closets shall be 1.6 gallon tank type.

2. Water heaters shall be electric and equipped with pressure relief valve and drain pan.

3. Floor drains with deep-seal traps and trap primers shall be provided in toilet rooms.

4. Tenant shall provide a minimum of one (1) 4" clean-out. Clean-out is to be located in rear demising wall and accessible from service corridor. If Tenant does not abut a service corridor, clean-out shall be located in toilet room or stock room for easy access by Landlord.

5. Water piping shall be copper with sweat type fittings.

6. All cold piping shall be insulated.

7. Sanitary pipe shall be cast iron.

8. Hair salons and other Tenants consuming substantial water (as determined by Landlord) are required to provide and install a water meter on Tenant side of tap value as specified by Landlord. The meter shall be equipped with an electronic remote reader to be located in Tenant service alcove and accessible from service corridor at 4'-0" above the finish floor.

MECH/ELECT TABULATION FORMS

DIRECTION FOR COMPLETION

GENERAL:

1. All blanks on the forms are to be filled in.

2. Forms must be completed by the Tenant's Mechanical and Electrical Engineers.

3. The Tenant's Project Architect/Manager is responsible for insuring mechanical and electrical coordination.

4. Mechanical and Electrical contract documents will **not** be reviewed without completed Data Forms. Construction documents received without completed data forms will be considered as **not** received.

MECHANICAL:

1. Only recognized ASHRAE methods are to be employed.

2. Check sheets are **not** intended to be a calculation method but merely a standard summary of data as calculated by the Tenant's Engineers. All factors provided are minimums.

ELECTRICAL:

1. All contract documents shall be in compliance with all applicable codes.

2. All data submitted shall be coordinated with Tenant's contract documents.

3. Provide power factor correction to 95% for all motors and air conditioning compressors 1 HP and greater.

MECH/ELECT TABULATION FORMS 2 of 5

DATA TABULATION FORMS

TENANT_____ SPACE NO._____

GROSS AREA_____SQ. FT. LEVEL_____

****

LOAD TYPE: CONNECTED KW:

SPACE LIGHTING_____

SHOWCASE LIGHTING_____

SIGN LIGHTING_____

RECEPTACLES_____

WATER HEATING_____

ELECTRIC SPACE HEATING_____

SPECIAL APPLIANCES/EQUIPMENT_____

MISCELLANEOUS (INDICATE)_____

AIR CONDITIONING_____

TOILET EXHAUST FAN_____

EXHAUST HOOD FANS_____

MAKE-UP AIR UNIT_____

POWER FACTOR CORRECTION (KVAR)_____

LARGEST MOTOR (INDICATE H.P.)_____

TRANSFORMER SIZE (INDICATE KVA)_____

TOTAL CONNECTED LOAD_____

TOTAL SIMULTANEOUS CONTINUOUS LOAD_____

MAINTAINED AT 3 HOURS OR MORE

FIRM:_____

PREPARED BY:_____

PHONE NO._____

MECH/ELECT TABULATION FORMS 3 of 5

ELECTRICAL HEAT PRODUCING TABULATION FORMS

TENANT_____ SPACE NO._____

AREA (SQ. FT.)_____LEVEL _____

LOAD TYPE: CONNECTED KW:

SPACE LIGHTING_____

SHOWCASE LIGHTING_____

SIGN LIGHTING (INTERIOR ONLY)_____

RECEPTACLES_____KW x 50% DIVERSITY =_____

MISCELLANEOUS (List)_____

_____

_____

SPECIAL APPLIANCES OR EQUIPMENT_____

MOTORS (OTHER THAN HVAC)_____

XMFR (_____KW) (0.90) (0.045) = _____

_____

TOTAL CONNECTED ELECTRICAL HEAT PRODUCING LOAD (HPL)_____KW

(HPL)_____ KW x 1000 / (AREA)_____S.F. = _____W/S.F.

NOTE: Tenant is restricted to a maximum of 8 watts/S.F. of total heat producing load by lease

CENTRAL AIR CONDITIONING LOAD FORM

TENANT_____ SPACE NO._____

GROSS AREA_____SQ. FT. LEVEL_____

****

SALES AREA:_____SQ. FT.

SENSIBLE COOLING LOAD CALCULATIONS

*Lighting:_____watts x 3.41 x%=_____BTUH

*Show Case:_____ watts x 3.41 x_____%=_____BTUH

**Equipment:_____ watts x 3.41 =_____BTUH

People:_____Sq. Ft. x 250_____BTUH

75 sq. ft./person

Exterior Walls:_____Sq. Ft. x 2.5 BTUH/Sq. Ft.=_____BTUH

Exterior Doors, Windows, etc. _____BTUH

TOTALS _____BTUH

COOLING CFM=_____SENSIBLE BTUH/(1.08 x 18)=_____ CFM

HEATING LOAD CALCULATIONS

Roof:_____Sq. Ft. x 7.0 BTUH/Sq. Ft._____BTUH

Exterior Walls:_____Sq. Ft. x 10.0 BTUH/Sq. Ft.=_____BTUH

Exterior Doors, Windows, etc. _____BTUH

TOTALS _____BTUH

FOOTNOTES:

* Actual plan count - not Sq. Ft. Factors (coordinate with Elect. Dwgs.). Submit support data for % special allowance factor used.

** Process, Kitchens, etc., attach separate calculation sheets. Identify each piece of equipment and submit cut sheets indicating cooling loads.

MECH/ELECT TABULATION FORMS 5 of 5

CENTRAL AIR CONDITIONING LOAD FORM

STOCK AREA:_____SQ. FT.

SENSIBLE COOLING LOAD CALCULATIONS

*Lighting:_____watts x 3.41 x_____%=_____BTUH

**Equipment:_____watts x 3.41=_____BTUH

*XMFR (____KW) (0.90) (0.045) (3410)=_____BTUH

Exterior Walls:_____Sq. Ft. x 2.5 BTUH/Sq. Ft.=_____BTUH

Exterior Doors, Windows, etc. _____BTUH

TOTALS _____BTUH

COOLING CFM=_____SENSIBLE BTUH/(1.08 x 18)=_____ CFM

HEATING LOAD CALCULATIONS

Roof:_____Sq. Ft. x 7.0 BTUH/Sq. Ft.=_____BTUH

Exterior Walls:_____Sq. Ft. x 10.0 BTUH/Sq. Ft.=_____BTUH

Exterior Doors, Windows, etc. _____BTUH

TOTALS _____BTUH

****

TOTALIZED SUMMARY:

Grand Total Air Quantity=_____CFM /_____SF=_____CFM/SF

Grand Total Heating=_____BTUH_____ KW

FOOTNOTES:

* Actual plan count - not Sq. Ft. Factors (coordinate with Elect. Dwgs.). Submit support data for % special allowance factor used.

** Process, Kitchens, etc., attach separate calculation sheets. Identify each piece of equipment and submit cut sheets indicating cooling loads.

Firm:_____

Prepared By:_____ Phone:_____

WATERSIDE SHOPS
TENANT PLAN REVIEW

GENERAL

1. Landlord shall furnish Tenant with one (1) set of prints of Lease Outline Drawings giving technical and design information for the Premises, provided that Landlord shall not be responsible for the accuracy, efficiency or sufficiency of said Lease Outline Drawings. Tenant shall be solely responsible for all technical and other examinations of the Premises and shall be exclusively responsible with respect to verification of actual field conditions and actual field measurements, and a full review of all technical and engineering requirements with respect to the Premises and Tenant's construction therein.

2. All prints, drawing information and other material submitted by Tenant to Landlord for approval as required herein shall be addressed to Landlord's Tenant Coordinator:

   The Forbes Company
   100 Galleria Officentre, Suite 427
   Southfield, MI 48034
   Attention: Waterside Shops Tenant Coordinator
   (248) 827-4600

3. Within fifteen (15) days following the execution of this Lease, Tenant shall notify Landlord's Representative in writing who Tenant's Architect or Designer will be, including name, address and telephone number. Tenant's Architects and Engineers must be licensed professionals within the State of Michigan and be qualified in all phases of store design and construction. Landlord reserves the right to approve Tenant's Architects and Engineers.

4. Tenant shall pay all fees of its Architect and Engineers. Landlord, Landlord's Representative, Landlord's Architect or Landlord's Tenant Coordinator shall not be in any way responsible or liable with respect to the accuracy, sufficiency, feasibility or code compliance of Tenant's plans, and Tenant shall be totally responsible for same.

PRELIMINARY STORE DESIGN DRAWINGS

1. Within thirty (30) days from either of the following dates, whichever shall be the first to occur: (a) receipt by Tenant of Lease Outline Drawings, and (b) execution of this Lease by the parties hereto, Tenant shall submit to Landlord two (2) sets of prints of Store Design Drawings prepared by an architect specializing in retail design, showing intended design character and finishing of the Premises. The Store Design Drawings shall comply with the design criteria of the Shopping Center and shall set forth the requirements of Tenant within the Premises. Should Tenant's storefront design be an extension of an established store prototype, it is recommended that Tenant include photographs of the most recently completed

store for review. Samples of storefront and interior samples keyed to drawings should accompany this submittal. Store fixturing (both permanent and movable) should be located on Tenant's floor plan.

2. Said drawings shall include but not be limited to the following:

- Merchandising layout of the Premises, merchandise allocations and fixture locations, both permanent and movable.

- Architectural design of the Premises, including floor plan, reflected ceiling plan, storefront elevations including sign(s), sections and complete fixturing information.

- Reflected ceiling plan showing mechanical outlets, type of lighting fixtures, other electrical equipment contemplated.

- Structural: Any alterations and/or additions and reinforcements to Landlord's structure required to accommodate Tenant's Work, all of which must be designed by a certified structural engineer at Tenant's expense.

- Material finish sample board including all finishes, paint, wallcovering, carpet, tile, etc. and mounted on 8" x 10" board with key to Store Design Drawings.

3. A copy of the Store Design Drawings will be returned to Tenant indicating Landlord's approval, approval as noted or not approved in a PDF format via e-mail or CD. Should the drawings not be approved, Tenant shall resubmit revised drawings for approval within ten (10) days of their receipt by Tenant.

WORKING DRAWINGS AND SPECIFICATIONS

1. Following the date on which Store Design Drawings bearing Landlord's approval are returned to Tenant, Working Drawings and Specifications shall be prepared by Tenant's Architect in strict compliance with the design criteria and requirements as set forth herein and shall adhere to the Store Design Drawings as approved by Landlord. Working drawings and specifications which are not preceded by Store Design Drawings are subject to rejection by Landlord's Representative.

2. All Working Drawings and Specifications prepared by Tenant's Architect shall be submitted by Tenant, two (2) sets of prints, to Landlord to approve within twenty-one (21) days from receipt by Tenant of Landlord's approval of store design drawings.

3. Working Drawings and Specifications must contain the following information:

- Architectural:
  - Key plan showing location of the Premises and space number.
  - Floor plan including all interior partitions and dimensions at minimum 1/8" scale.
  - Reflected ceiling plan, including sprinkler head layout, at minimum 1/8" scale.
  - Storefront elevation, including Landlord neutral piers and Tenant sign at 1/4" scale.
  - Overall interior sections through store at minimum 1/4" scale.
  - Details and sections through Tenant storefront at 1 1/2" scale.
  - Interior elevations at minimum 1/4" scale.
  - Details of special conditions at 1 1/2" scale.
  - Door schedule with details at 1 1/2" scale.
  - Details, catalog cut sheets and finishes for fixtures.
  - Finish and color schedule.
- Mechanical:
  - HVAC data tabulation forms.
  - Floor plan showing controls, ductwork, air conditioning, all unit ventilation equipment and condenser water lines.
  - Reflected ceiling plan, including diffusers and return air grilles, and indicating design air flows.
  - Schedule: All air conditioning units, exhaust fan(s) and miscellaneous HVAC equipment.
  - Information on gas (where applicable).
  - HVAC control wiring diagrams.
  - Fixture and equipment cut sheets and warranties.

- Electrical:
  - Electrical data tabulation load forms, fault calculations (rated in RMS Symmetrical Amperes) and Load Summary forms.
  - Floor plan, including branch circuiting and all equipment locations.
  - Electrical Riser diagram.
  - Panelboard and distribution panel schedules.
  - Lighting fixture schedule.
  - Legend.
- Plumbing:
  - Floor Plan indicating:

    Water piping
    Sanitary
    Plumbing vent piping
    Water heater
    Drinking fountain (optional)
    Water closet
    Lavatory
    Floor drain

  - Plumbing piping diagram.
  - Plumbing fixture schedule.
  - Water heater detail.
  - Hair, grease or lint interceptor when required by Landlord.
- Fire Protection: Plan of piping including sizes and sprinkler head locations, and hydraulic calculations.

4. One (1) copy of the Working Drawings and Specifications will be returned to Tenant or Tenant's Architect bearing Landlord's comments in a PDF format via e-mail or CD. Should the drawings not be approved by Landlord, drawings must be resubmitted for approval within ten (10) days of their receipt by Tenant. Tenant shall forward five (5) copies of signed and sealed Working Drawings to Landlord's on-site Representative prior to requesting the required construction meeting.

CONTRACTOR'S SHOP DRAWINGS

Tenant's Contractor must submit Shop Drawings for the following listed systems and equipment. After approval of same by Tenant's Architect/Engineer, two (2) approved copies shall be forwarded to Landlord's Representative to retain for permanent records. Required are the following:

1. Fire protection drawings and hydraulic calculations with Fire Marshall's and Landlord's Insurance Underwriter's approval thereon.

2. Sign Contractor's drawings for storefront, exterior, and interior signs, indicating sizes, materials, illumination, construction and installation details must be submitted in triplicate for the approval of Landlord and Landlord's Representative.

3. Structural steel and miscellaneous iron shop drawings must be submitted (in quadruplicate) for the approval of Landlord's Representative prior to commencing such work. Shop drawings shall consist of erection diagram locating new work, connections to existing structure, load calculations and all details of new work.

PROCEDURES FOR CONSTRUCTION

COMMENCEMENT OF CONSTRUCTION

Tenant shall commence construction upon Landlord's approval of the drawings or notification by Landlord that the space is available for construction, but not later than fourteen (14) days from whichever is the latter to occur. Tenant shall carry such construction to completion with all due diligence. The failure of Tenant to comply with procedures and schedules set forth herein or to commence construction or complete the construction of the Premises prior to the date of commencement of the term of the Lease shall have no effect whatsoever upon the commencement of said term which shall in any event commence at the time provided in the Lease.

TENANT CONTRACTOR CHECK-IN

The following procedures must be followed by Tenant's Contractor prior to the commencement of Tenant's Work on the Premises:

1. Provide Landlord five (5) days notice and meet Landlord's Representative on site for a pre-construction meeting.

2. Provide Landlord with executed copy of Tenant's Affidavit of Inspection and Acceptance (in Landlord's form) which states that Tenant has inspected the Premises and is familiar with all existing conditions and has field verified the dimensions. It is Tenant's responsibility to notify Landlord in writing of any discrepancies noted in the Premises prior to the start of Tenant's work.

3. Furnish one (1) set of Landlord approved Working Drawings and Specifications which shall remain on the job at all times during construction. This includes approved Sprinkler Shop Drawings signed by Landlord's Insurance Underwriter.

4. Submit copies of certificate of insurance and building permit, from the Building Department and any applicable permits from the Health Department.

5. Submit Tenant Contractor's performance and/or labor and material bonds which may be required by Landlord to insure the faithful performance of Tenant's work in accordance with drawings and specifications approved by Landlord.

6. Provide Landlord with evidence of insurance as called for below. Tenant or Tenant's Contractor shall secure, pay for and maintain, during the continuance of construction and fixturing work within the Premises, all of the insurance policies required and in the amounts as set forth below. Tenant shall not be permitted to commence any work until all required insurance has been obtained and certified copies of policies have been delivered to Landlord.

- Tenant's General Contractor's and Subcontractor's required minimum coverages and limits of liability:

  - Workmen's Compensation, Employer's Liability Insurance with limits as required by state law and any insurance required by any employee benefit acts or other statutes applicable where the work is to be performed as will protect the Contractor and Subcontractors from any and all liability under the aforementioned acts.

  - Commercial General Liability Insurance (including Contractor's Protection Liability) in an amount not less than Two Million Dollars ($2,000,000.00) per occurrence whether involving personal injury liability (or death resulting therefrom) or property damage liability or a combination thereof with a minimum aggregate limit of Two Million Dollars ($2,000,000.00).

    Such insurance shall provide for explosion and collapse coverage and contractual liability coverage and shall insure the General Contractor and/or Subcontractors against any and all claims for personal injury, including death resulting therefrom and damage to the property of others and arising from operations under the Contract and whether such operations are performed by the General Contractor, Subcontractors, or any of their Subcontractors, or by anyone directly employed by any of them.

  - Comprehensive Automobile Liability Insurance, including the ownership, maintenance and operation of any automotive equipment owned, hired and non-owned in the following minimum amounts:

Bodily injury each occurrence	$2,000,000
Property damage liability	$2,000,000

    Such insurance shall insure the General Contractor and/or Subcontractors against any and all claims for bodily injury, including death resulting therefrom and damage to the property of others arising from its operations under the Contract and whether such operations are performed by the General Contractor, Subcontractors, or any of their Subcontractors or by any one directly or indirectly employed by any of them.

- Tenant's Protective Liability Insurance - Tenant shall provide Owner's Protective Liability Insurance that will insure Tenant against any and all liability to third parties for damage because of bodily injury liability (or death resulting therefrom) and property damage liability of others or a combination thereof which may arise from work in the completion of the Premises, and any other liability for damages which the General Contractor and/or Subcontractors are required to insure under any provisions herein. Landlord, Landlord's Representative, Landlord's Architect, Landlord's Architect's Consultants and Landlord's Tenant Coordinator shall be named as additional insured.

  Said insurance shall be provided in minimum amounts as follows:

Bodily injury, each occurrence	$2,000,000
Property damage, each occurrence	$2,000,000

- Tenant's Builder's Risk Insurance - Tenant shall provide a completed Value Form "All Physical Loss" Builder's Risk Coverage on its work in the Premises as it relates to the building within which the Premises is located, naming the interest of Landlord, Landlord's Representative and all of Landlord's Subcontractors, as their respective interest may appear within a radius of one hundred feet (100') of the Premises.

- Insurance policies shall name Waterside Shops Limited Partners LLC., JPRA Architects; Jon Greenberg & Associates, Inc.; and anyone else designated by Landlord as additional insured. Certificates of Insurance shall provide that no change or cancellation of such insurance coverage shall be undertaken without thirty (30) days written notice to Landlord.

7. Provide a complete list naming Contractors, Subcontractors and Suppliers to be used during the construction or remodel of the Premises including addresses and telephone numbers.

8. Provide proposed construction schedule completed by Tenant's Contractor.

9. All Tenant Contractors are required to comply with instructions from Landlord's Representatives and Landlord's General Contractor, and Construction Rules and Regulations contained in the Lease, this Handbook and/or other documents provided by Landlord to Tenant's Contractor at job site. At the discretion of Landlord and as a result of failing to observe construction rules and regulations, fines may be imposed and/or the job stopped until the situation is rectified. In addition, Tenant's Contractor or Subcontractor may be permanently suspended from working at Waterside Shops at Landlord's discretion if the rules and regulations are not followed.

10. Prior to commencement of construction, Tenant's General Contractor shall forward to The Forbes Company, Attention: Waterside Shops Landlord's Representative, the sum of Ten Thousand dollars ($10,000.00). Said amount shall be held by Landlord as a security deposit until all "Close-Out" Procedures set forth herein have been completed by Tenant and/or Tenant's General Contractor and all of the Landlord punchlist items have been completed. If such Close-Out Procedures have not been completed within thirty (30) days after Tenant opens for business, Landlord shall have the right to deduct from such amount any charges provided for herein and/or the costs of any work performed by Landlord on behalf of Tenant.

CONSTRUCTION RULES AND REGULATIONS

These construction rules and regulations are intended to insure the safety, protection and welfare of all persons associated with the development of Waterside Shops. Failure to observe these rules and regulations may, at the discretion of Landlord, result in the job being stopped and Tenant's General Contractor or Subcontractor being permanently suspended from working at Waterside Shops.

1. Before Construction:

- Procedures outlined under "Tenant Contractor Check-In" must be performed and Tenant's Affidavit of Inspection and Acceptance shall be completed prior to meeting with Landlord's Representative.

- Fixture and equipment cuts and warranties must be submitted to Landlord for review and approval.

- Coring through floor slabs for electrical, security, video, telephone/data and plumbing penetrations must be coordinated with Landlord to assure that all available information regarding structural and/or electrical work contained in the concrete floor slabs is known to the Contractor prior to making any floor penetrations. In any event, Landlord assumes no responsibility for any damages done to such facilities, and all costs to repair damaged services will be the responsibility of Tenant's Contractor at fault. Tenant shall not proceed with coring without Landlord approval.

2. General Rules:

- Tenant, Tenant's Architect and/or Contractor must inspect the Premises to become familiar with all existing conditions prior to beginning Tenant design or construction, including field measuring the space to determine exact dimensions, verifying slab conditions, elevations of slab, height of structure above, etc. The Space Layout provided by Landlord's Representative covers general conditions and is not an "as-built" drawing. Unless specifically provided in the Lease, each Tenant space is leased "as-is".

WATERSIDE SHOPS

PROCEDURES FOR CONSTRUCTION

- No construction is to take place beyond the lease line.

- Tenant has total responsibility for compliance with all applicable codes, ordinances and the building classification for the specific occupancy type.

- Tenant's Contractor is not permitted to post company name or logo anywhere on the Project during any phase of Tenant's construction.

- All Contractors engaged by Tenant shall be bondable, licensed contractors, capable of performing quality workmanship and working in harmony with Landlord's Representative. All work shall be coordinated with the general Project work.

- All Contractors engaged by Tenant shall work in harmony with Landlord's Contractors and the Contractors employed by the other Tenants so that there shall be no labor disputes which would interfere with the operation, construction and completion of the Shopping Center or with any work being carried out therein. Tenant's Contractors shall each agree and Tenant's construction contracts and bid documents shall provide that in the event of a strike or work stoppage, the Contractor will continue construction upon the Premises, and the Contractors will assure payment during the period of such strike or work stoppage in accordance with the rates and fringe benefits to be established by the subsequent settlement.

- All upper level floor slab penetrations must be sealed and made water tight according to Project Details. All floor penetrations must be made fire proof; duct penetrations must be made fire proof; duct penetrations, except as prohibited by code, to have U.L. listed fire and smoke dampers in accordance with Project Details.

- During construction Tenant is responsible for any actions of its Contractor and Subcontractors within the Common Area of the enclosed Mall or adjacent Tenant space. All delivery of construction materials will be done through rear service corridor during non-operational hours of the Mall. For those Tenants not served by a service corridor or exit door from the rear, all deliveries must be coordinated with Landlord's Representative. Tenant shall minimize disruption or interference of any ongoing operations. Tenant shall be liable for any damage incurred by the negligence of its Contractor or agents and disruption of Mall activities including parking lot entrance drives and service areas caused by Tenant's failure to coordinate with Landlord.

- Any construction activity resulting in excessive noise which would be disruptive to Waterside Shops activities must be accomplished during hours the Shopping Center is not open to the public. Landlord's Representative reserves the right to order an immediate halt to any excessively noisy work.

- Standard Project Details, as issued by Landlord and as they pertain to Tenant's Work, shall govern with respect to such work. Such details shall be incorporated into the Working Drawings and Specifications for the Premises.

3. During Construction:

- Tenant Contractor's work area (including storage) will be restricted to the Premises. No construction will be permitted in the enclosed Mall or adjacent spaces. Contractors must use the Premises as a staging area for all construction, with the exception of storefront and signs. No storage or office trailers will be allowed on the site without Landlord's written permission.

- Certain instances may require Tenant's Contractor and/or Landlord to enter other Tenants' premises to perform necessary under slab work, construction extending through levels above, etc. Arrangements for permission to enter other Tenants' premises must be made through Landlord. Such work must be performed at times when such other Tenants' operation will not be affected. All costs associated with said work, including security personnel, are Tenant's expense.

- Landlord's structural elements other than floor slab may not be used for support of any Tenant construction or equipment including storefront grilles.

- All material used for Tenant's work will be maintained at all times within the Premises. Under no circumstances will any portion of the enclosed Mall area be used to store Tenant's or Tenant Contractor's material, equipment or trash. Landlord reserves the right to clear the enclosed Mall area of any dirt or debris due to Tenant's construction and back charge to Tenant without prior written notice.

- Tenant and Tenant's Contractor shall protect their work from damage and shall protect the work of other Tenants from damage and theft by Tenant, Tenant's Contractor and their employees and Subcontractors. Landlord shall not be held responsible for damage done by other Tenants or their Contractors. Mall floors, neutral strips and Landlord's bulkhead must be protected from damage by Tenant's construction. Any damage resulting from Tenant's construction will be rectified by Landlord at Tenant's expense.

- Tenant shall pay for temporary electricity consumed during the construction of the Premises as metered by the existing meter. If the meter is removed or does not exist, the temporary electrical rate is $0.25/s.f./month or a minimum of $500.00 per month until a meter is operational.

- Tenant equipment shall not penetrate Landlord's roof or exterior walls. Tenant equipment must utilize existing utility shafts for exhaust. Coordinate all work with Landlord's Representative.

- Elevators may be used as necessary for material deliveries, but must be scheduled for use through Landlord's Representative. Tenant shall be required to provide protection to the elevator as directed by Landlord's Representative and shall reimburse Landlord for all costs to repair any damage caused by Tenant's use.

- Tenant's Contractor shall not use "scissor lifts" for construction of the Premises.

- Tenant shall maintain all services to all adjoining Tenant spaces, including but not limited to HVAC, plumbing, fire protection, electrical and all miscellaneous systems.

4. Temporary Storefront Barricades:

- Landlord may furnish and install a temporary storefront barricade along the Mall lease line. Tenant shall reimburse Landlord One Hundred ($100.00) per linear foot of barricade installed.

- Tenant's Contractor, with the approval of Landlord's Representative shall relocate the barricade a maximum of three feet (3') into the enclosed Mall during actual construction of the storefront. In relocating said barricade, Tenant's Contractor shall not drill or otherwise anchor directly into enclosed Mall floor. Tenant's Contractor shall repair the barricade to Landlord's satisfaction. Tenant's Contractor must provide a dust enclosure acceptable to Landlord's Representative from the bottom of the barricade to Landlord's bulkhead. At the time of barricade relocation Tenant's Contractor shall install barricade and panels to match existing. Tenant's Contractor shall also provide sufficient protection of the enclosed Mall floor to prevent any damage during storefront construction.

- No access shall be allowed through the temporary storefront barricades except for those Tenants that do not have access to either a service exit corridor or an exit door through exterior walls. Door shall be painted to match barricade. Where access is provided through the barricade, Tenant's Contractor shall provide a rug or mat of sufficient size on the interior side of the barricade for workers to clean off their shoes so as to not track dirt or dust into Mall. This access door shall be kept closed at all times.

- Temporary storefront barricade shall remain in place until it is determined by Landlord's Representative that the Premises is fully fixtured and merchandised.

- Upon determination by Landlord that Tenant is ready to open for business, Landlord shall direct Tenant's Contractor to remove the temporary storefront barricade and dispose of all materials off-site. Tenant shall reimburse Landlord for all costs to repair any damage to the Mall caused by construction of Tenant's storefront and the attachment or relocation of the temporary storefront barricade.

5. Sprinkler System:

- Tenant's Contractor shall install complete sprinkler system within the Premises up to final connection to sprinkler stub provided by Landlord.

- Tenant's Contractor shall have system pressure tested and approved by all authorities prior to final connection to Landlord's system.

- If Landlord's system is inactive (prior to Mall opening), Tenant's Contractor shall make final connection to Landlord's system upon acceptance by Landlord's Representative of all required test data and approvals.

- Upon activation of Landlord's system, Tenant's Contractor shall notify Landlord's Representative at such time as final connection to the Mall system is ready to be made. Only Landlord's Sprinkler Contractor shall drain the Mall system and only during nonbusiness hours. Once the system is drained, Tenant's Contractor shall make the final connection and remain in the Premises while the Mall Contractor fills the system to repair any leaks. Should any problems with Tenant's system develop at this time, Tenant's Contractor shall make any necessary repairs immediately. Tenant shall reimburse Landlord for all costs associated with the draining and refilling of the Mall system including labor.

6. Parking and Deliveries:

- Parking is allowed in Landlord's designated areas only. Construction related vehicles parked in service courts or unauthorized areas will be towed at the expense of the owner of the vehicle.

- Except when unloading materials at service entrances (15 minute limit), Tenant's Contractor's vehicles must be parked in designated areas. No parking will be allowed at service areas. No vehicles of any type will be allowed to drive on the sidewalk or park or stand at Mall entrances.

- All construction materials shall be brought into the Premises through the service door, not through the Mall common area. Those Tenants who do not have service doors must make arrangements with Landlord's Representative to schedule deliveries and route through other areas.

- Each Contractor must notify Landlord's Representative of major material deliveries for which an alternate delivery route is needed or when additional unloading time is required.

- Each Contractor will be responsible for the protection of the Mall. Plywood and visqueen protection is required wherever it is necessary to use Mall floors to deliver construction materials and equipment. All repair of damage to the Mall will be performed by Landlord's Contractor at the cost of the Tenant causing the damage. The floor shall be covered and protected in a manner acceptable to Landlord along the entire route of the delivery.

- Only air filled rubber wheeled pneumatic carts may be used in the Mall.

- All finished surfaces must be protected as determined by Landlord's Representative.

7. Security:

- Landlord is not responsible for securing the Premises. All barricades and entrances to work areas must be secured nightly.

- Securing construction tools and materials is Tenant's Contractor's responsibility.

8. Trash: Tenant shall utilize dumpsters/compactors as directed by the Landlord's Representative for the disposal of all construction and merchandising debris. Tenant shall not permit trash to accumulate in the Premises or service corridors and shall keep the area of the trash dumpster/compactor in an orderly condition. The trash removed from the premises must be broken down into the smallest component possible prior to removal and dumping.

9. Completion:

- Landlord shall have the right to perform, on behalf of and for the account of Tenant, subject to reimbursement of the cost thereof by Tenant, any or all of Tenant's Work which Landlord determines in its sole discretion should be performed immediately and/or on an emergency basis for the best interest of the Project, including without limitation work which pertains to structural components, electrical, mechanical, sprinkler and general utility systems, roofing and removal of unduly accumulated construction materials and debris.

- Tenant shall contact Landlord's Representative prior to completion of the Premises to arrange for a final inspection. Final inspection will consist of an on-site walk-through conducted by Landlord's Representative. A punchlist will be issued by Landlord's Representative and completed in a timely manner by Tenant's Contractor.

PROCEDURES FOR CONSTRUCTION

- Tenant is responsible for securing a Final Inspection or Certificate of Occupancy from governmental authorities.

- Tenant shall deliver to Landlord's Representative complete items as outlined in "Tenant Close-Out Process". Tenant shall pay Twenty-Five Dollars ($25.00) per day after thirty (30) days for noncompliance with Tenant Close-Out Process, including the completion of the punchlist.

- Upon the completion of Tenant's Work, all facilities shall be fully useable for the purpose intended without defects.

- Upon the completion of Tenant's Work, warranties (one year from date of store opening) on all work and equipment shall be provided to Landlord by Tenant. All warranties relating to mechanical and electrical systems shall be extended to Landlord.

WATERSIDE SHOPS

TENANT'S AFFIDAVIT OF INSPECTION AND ACCEPTANCE

TO: The Forbes Company
100 Galleria Officentre, Suite 427
Southfield, Michigan 48034

RE: Tenant:_____
Space #:_____

I hereby acknowledge that I, the Tenant's Contractor, am duly authorized for the execution of constructing this Tenant's new or remodeled Premises, per the drawings approved by the Landlord.

I acknowledge receipt of, have thoroughly read and completely understand the following:

1. Tenant Construction Handbook which includes the Landlord's Rules and Regulations for Waterside Shops.

2. Landlord's approved plans.

I will fully abide by same and will cause all my employees and subcontractors to abide by same. I will accept the consequences for failure to abide by same.

I understand that all items relative to design and construction criteria noted on the Landlord approved plans and listed in these documents are contingencies of the Landlord's approval. If the contract document drawings given to me by the Tenant do not conform with these plans, I will notify the Tenant.

RE: Tenant:_____
Space #:_____

WATERSIDE SHOPS

TENANT'S AFFIDAVIT OF INSPECTION AND ACCEPTANCE

I accept this space as being completed for Tenant construction to start.

Comments:

_____

_____

_____

_____

_____

_____

_____

CONTRACTOR: _____

ADDRESS: _____

TELEPHONE NUMBER: _____

AUTHORIZED REP.: _____

TITLE: _____

SIGNATURE: _____

DATE: _____

WATERSIDE SHOPS

FULL UNCONDITIONAL WAIVER

My/our contract with _____
(other contracting party)

To provide _____ for the improvement of the property
(Kind of material and/or work)

described as:

_____
_____
_____
_____
_____

_____ having been fully paid and satisfied, all my/our construction lien rights against such property are hereby waived and released.

_____
(Name of lien claimant)

By:_____ Signed on:_____
(Signature of lien claimant or authorized officer or agent) (date)

Address: _____
_____
_____

Telephone: _____

Sworn to and subscribed before me this ___ day of _____, 20___

_____
Notary Public

My Commission Expires:_____

(NOTARIAL SEAL)

WARNING: DO NOT SIGN BLANK OR INCOMPLETE FORMS
RETAIN A COPY

WATERSIDE SHOPS

TENANT'S AFFIDAVIT

STATE OF FLORIDA

COUNTY OF COLLIER

KNOW ALL MEN BY THESE PRESENTS:

Before me, the undersigned authority, a notary public in and for _____ _____, personally appeared _____ who, after being by me duly sworn, deposes and states as follows:

That affiant, as Owner, entered into a contract with _____ as Contractor on the _____ day of _____, 20_____, for certain work to be performed and materials to be furnished by Contractor in the construction of a store building located in the Mall in _____(County), ___ (State).

Affiant states that the construction contracted for has been completed, and that the same has been approved and accepted by Affiant as Owner; that all bills, including both labor and materials, incurred in connection with such construction, have been paid, and that there are no bills or obligations outstanding in connection with such construction, and no liens existing or threatened on account of such construction.

Affiant makes this statement for the purpose of inducing _____ to release certain funds to Affiant, recognizing that said _____ would not release the funds if the statements contained herein are not true and correct.

_____
Owner Affiant

SUBSCRIBED AND SWORN TO BEFORE ME AT ___ this_____day of _____, 20____.

_____
Notary Public

My Commission Expires: _____
(NOTARIAL SEAL)

WATERSIDE SHOPS

TENANT'S CLOSE-OUT PROCESS

Within sixty (60) days of opening or request from Landlord, whichever is earlier, Tenant shall complete or furnish to Landlord the following:

1. Tenant and Tenant's Contractor must have made payment of all construction charges due.

2. The Premises must be one hundred percent (100%) complete, in accordance with good workmanship and the Working Drawings and Specifications as approved by Landlord.

3. Provide Landlord with a copy of unqualified, Final Certificates of Occupancy from the Building Department.

4. Letter from Tenant stating date Tenant has opened for business.

5. Sworn Statement from Tenant listing the total cost of material and labor by trade for leasehold improvements, Tenant's fixtures and Landlord furnished work in the Premises.

6. Waivers of Lien, with original signatures from Tenant's General Contractor and each Subcontractor for the amounts specified in Item 5. No Partial Waivers of Lien will be accepted.

7. Tenant's Affidavit of Inspection and Acceptance of the Premises.

8. One set of "as-built" drawings in PDF format for Landlord's file.

9. One set of as-built final mechanical and electrical calculation forms.

10. One set of balancing reports for all HVAC systems.

11. Fixture and equipment warranties valid for one (1) year from date Tenant opens for business.

12. Certification of noncombustible lumber, if used, conforming to U.L. requirements.

13. Statement from Tenant pursuant to which Tenant agrees to indemnify Landlord for any claims by Material Suppliers, Contractors or Subcontractors.

WATERSIDE SHOPS

CONSTRUCTION DETAILS

The following are several sets of detail sheets:

- The first set is labeled with “TD” for Tenant Details. These details have been selected from Waterside Shops’ Construction Documents illustrating the interface between Landlord and Tenant construction for architectural and structural conditions and requirements for all retail Tenants.

- The second set is labeled with “MEP” for Mechanical, Electrical and Plumbing Details. These details illustrate the Mechanical, Electrical and Plumbing systems with respect to the systems interface.

- The final set of detail sheets labeled “TFC” are those details pertaining to Tenant Construction and are requirements of the Construction Exhibit of the Lease and this Handbook.

WATERSIDE SHOPS

QUIRK MITER DETAIL - STONE

NO SCALE

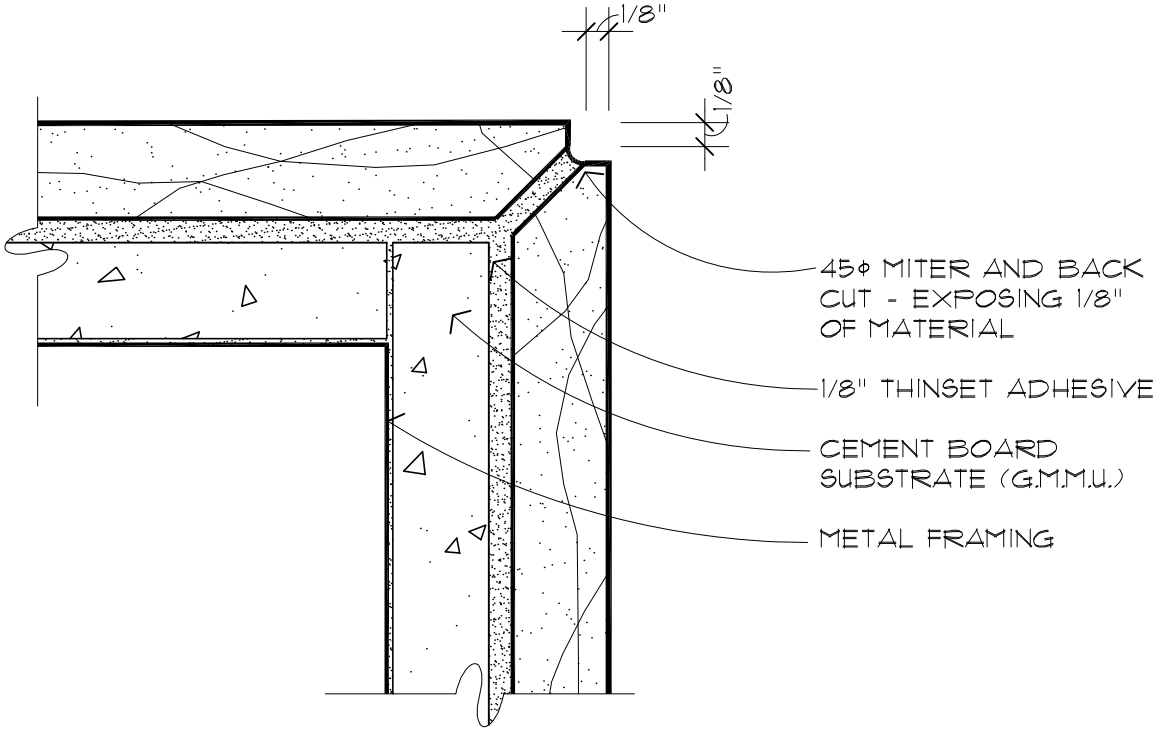

WATERSIDE SHOPS

FIRST FLOOR TRANSITION AT MALL TILE/WOOD PLANK

SCALE: FULL

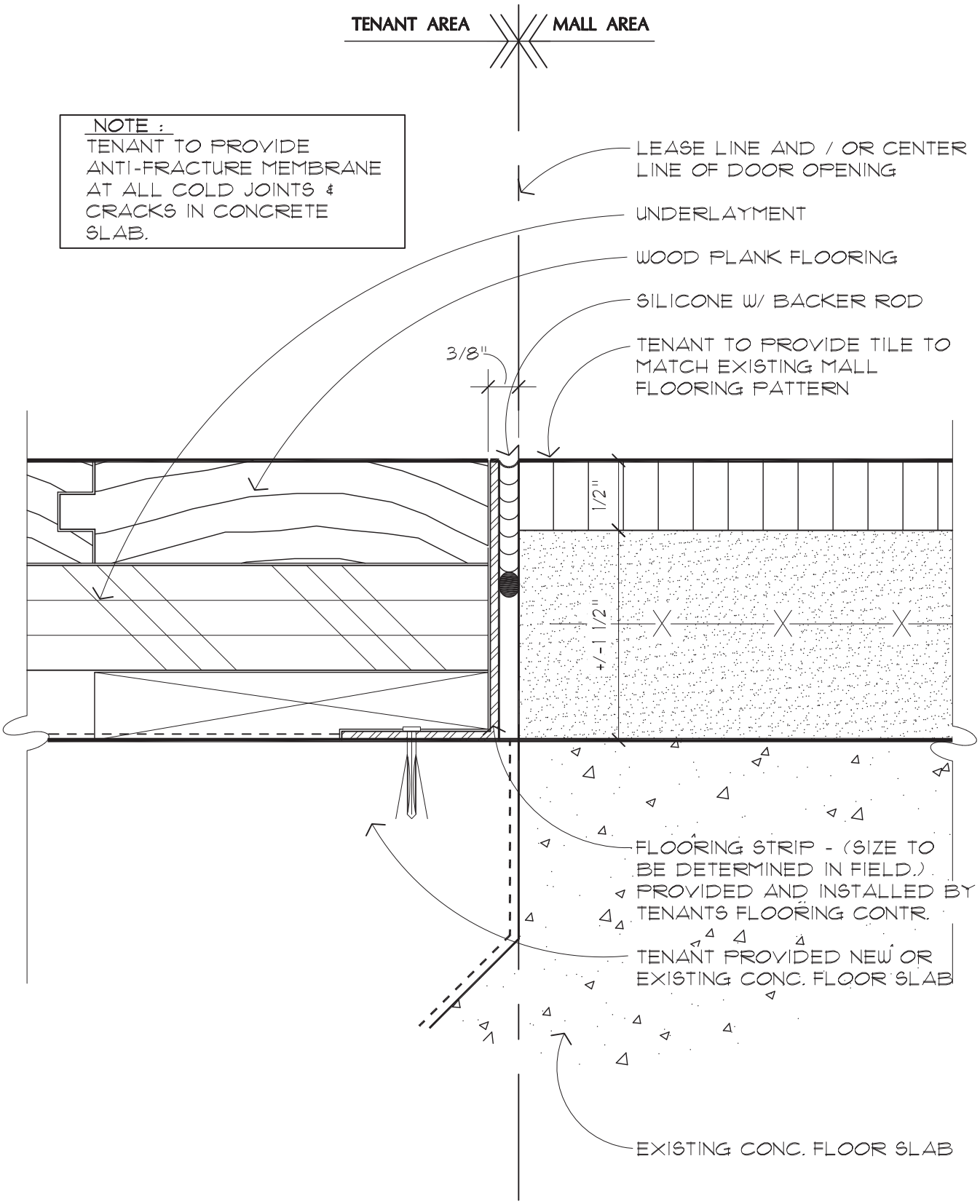

WATERSIDE SHOPS

SECOND FLOOR TRANSITION AT MALL TILE/WOOD PLANK

SCALE: FULL

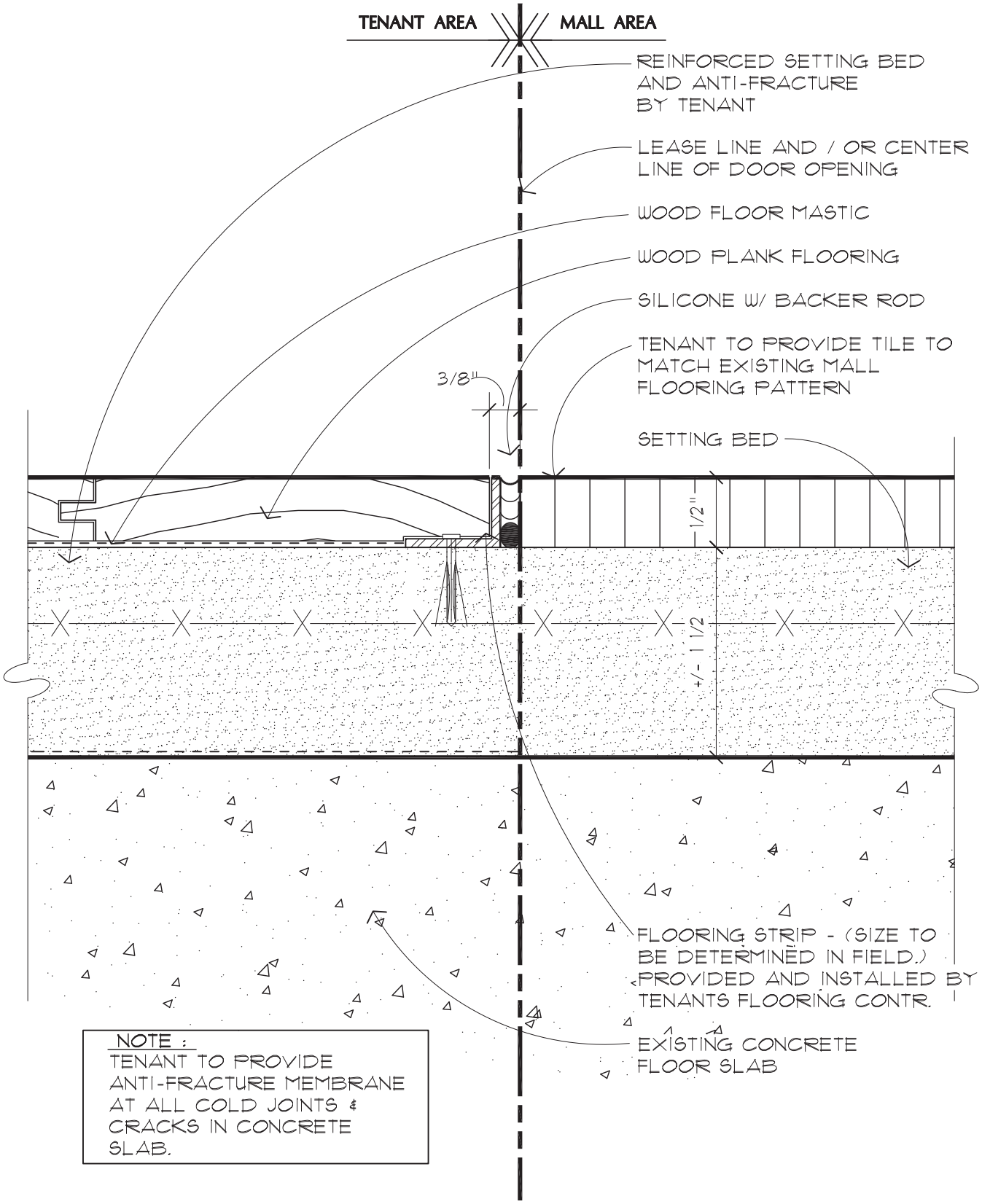

NOTE :
TENANT TO PROVIDE ANTI-FRACTURE MEMBRANE AT ALL COLD JOINTS & CRACKS IN CONCRETE SLAB.

WATERSIDE SHOPS

FIRST FLOOR TRANSITION AT MALL TILE/TENANT'S TILE

SCALE: FULL

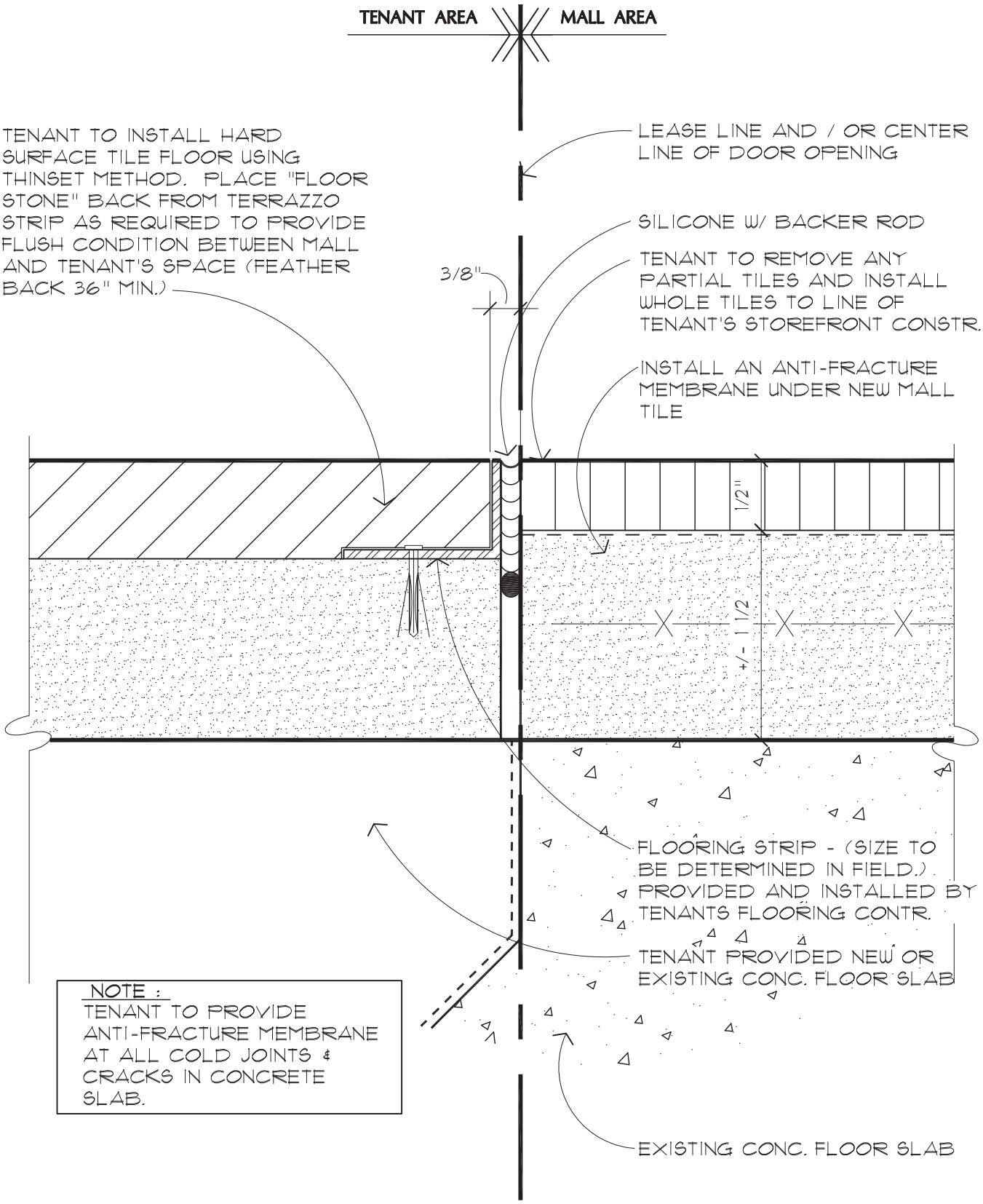

WATERSIDE SHOPS

SECOND FLOOR TRANSITION AT MALL TILE/TENANT'S TILE

SCALE: FULL

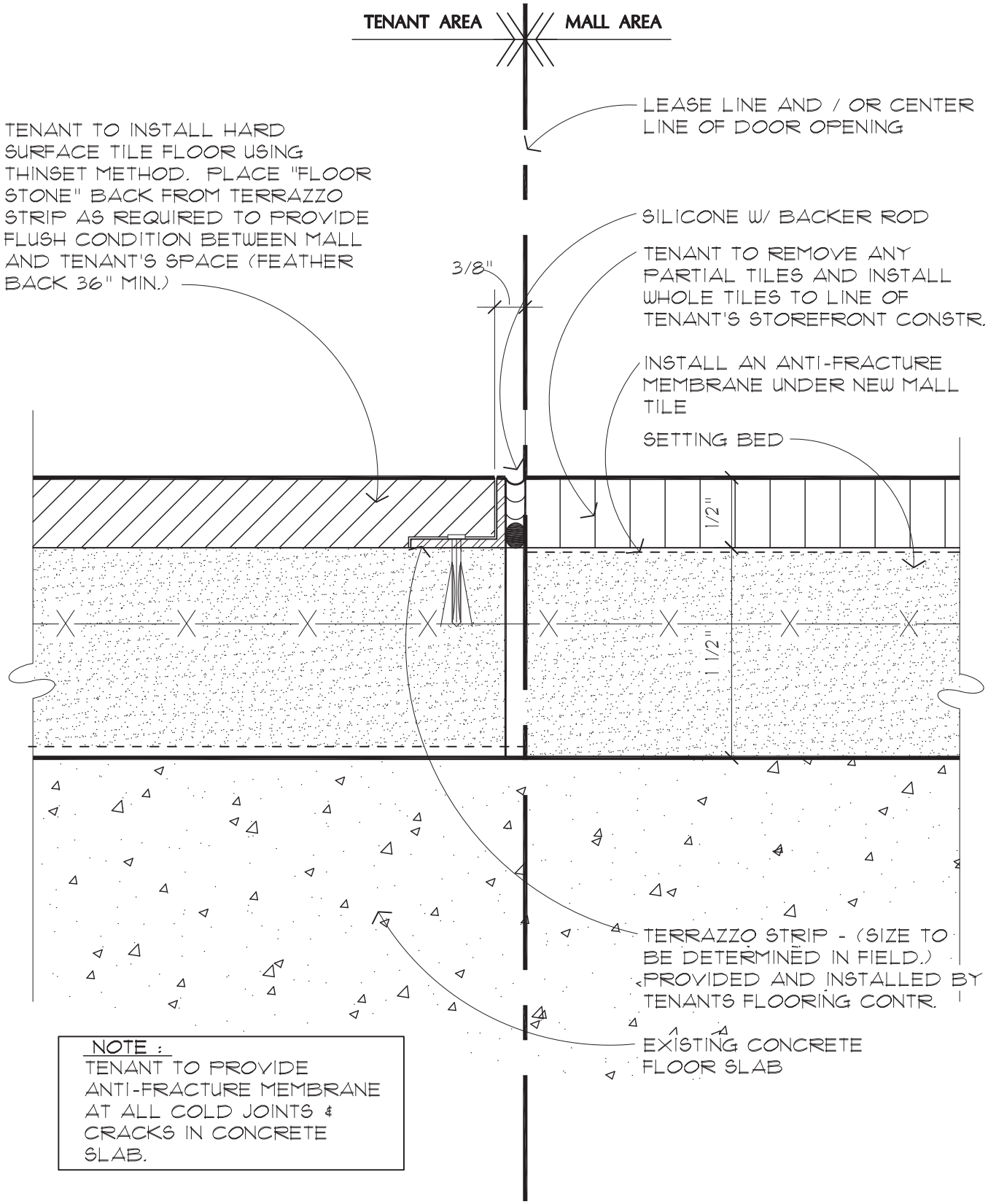

WATERSIDE SHOPS

GLAZING BASE DETAIL

SCALE: 6" = 1'-0"

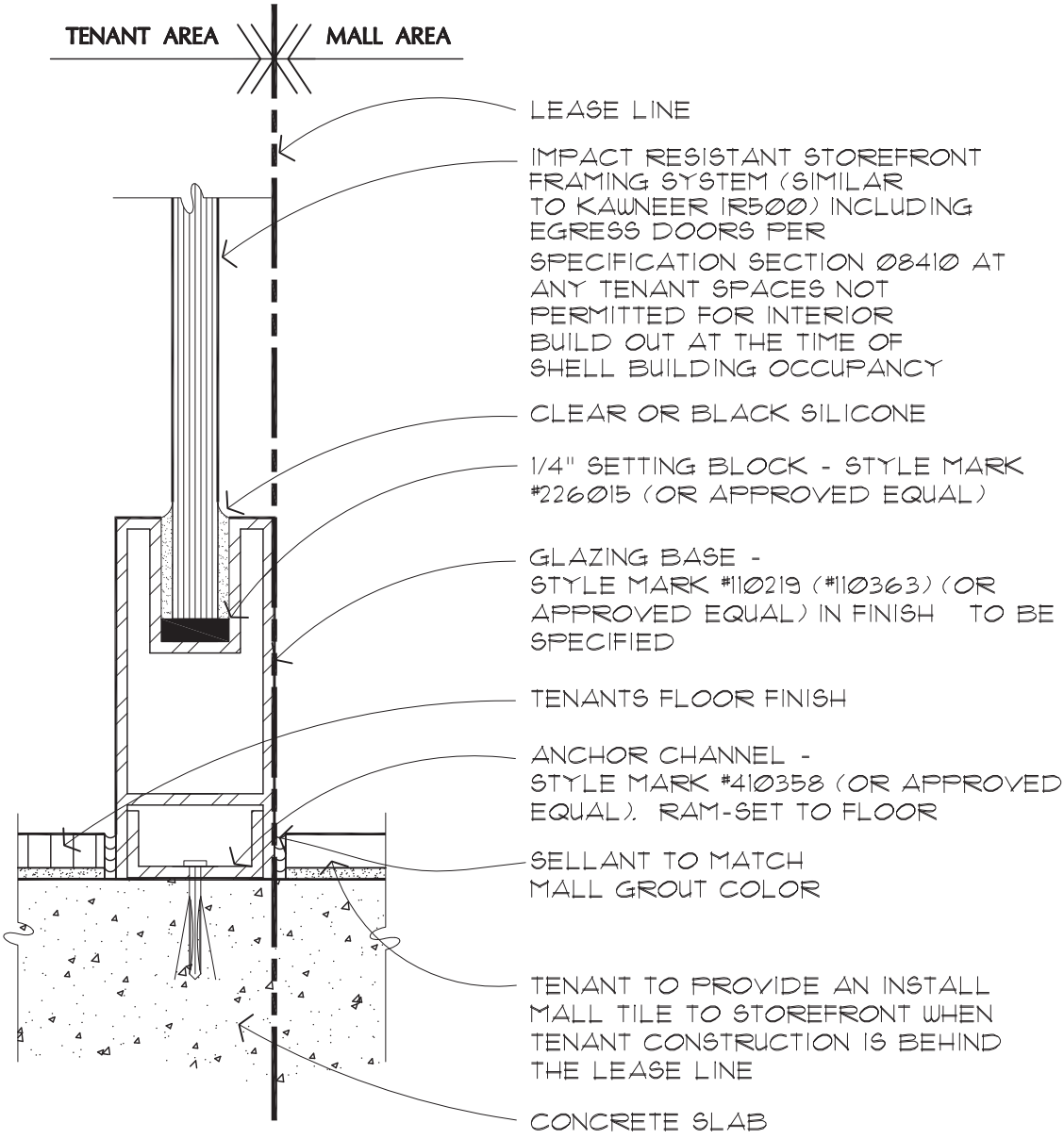

WATERSIDE SHOPS

RECESSED GLAZING BASE DETAIL

SCALE: 6" = 1'-0"

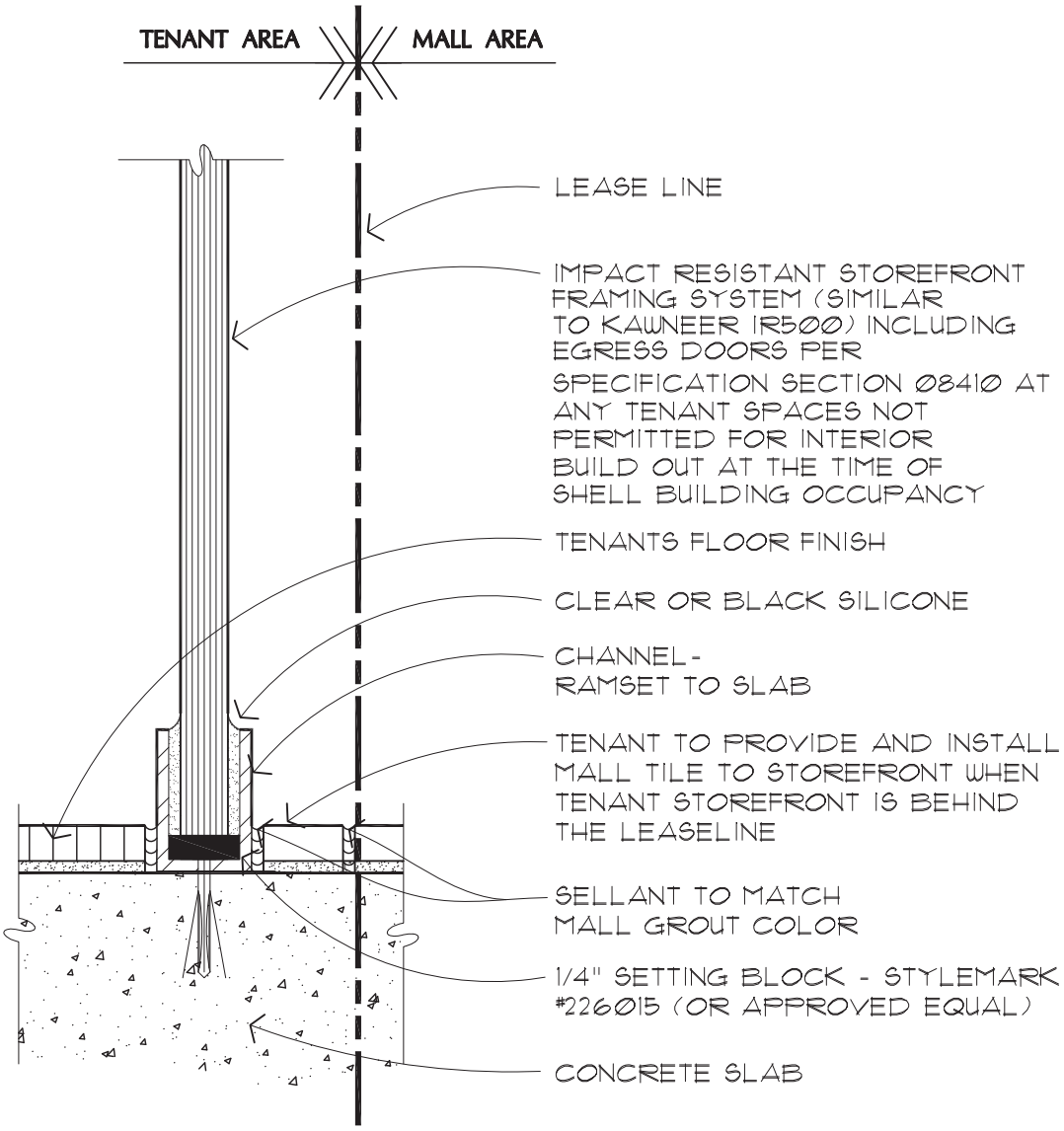

WATERSIDE SHOPS

GLAZING HEAD DETAIL - EXPOSED CHANNEL

SCALE: 6" = 1'-0"

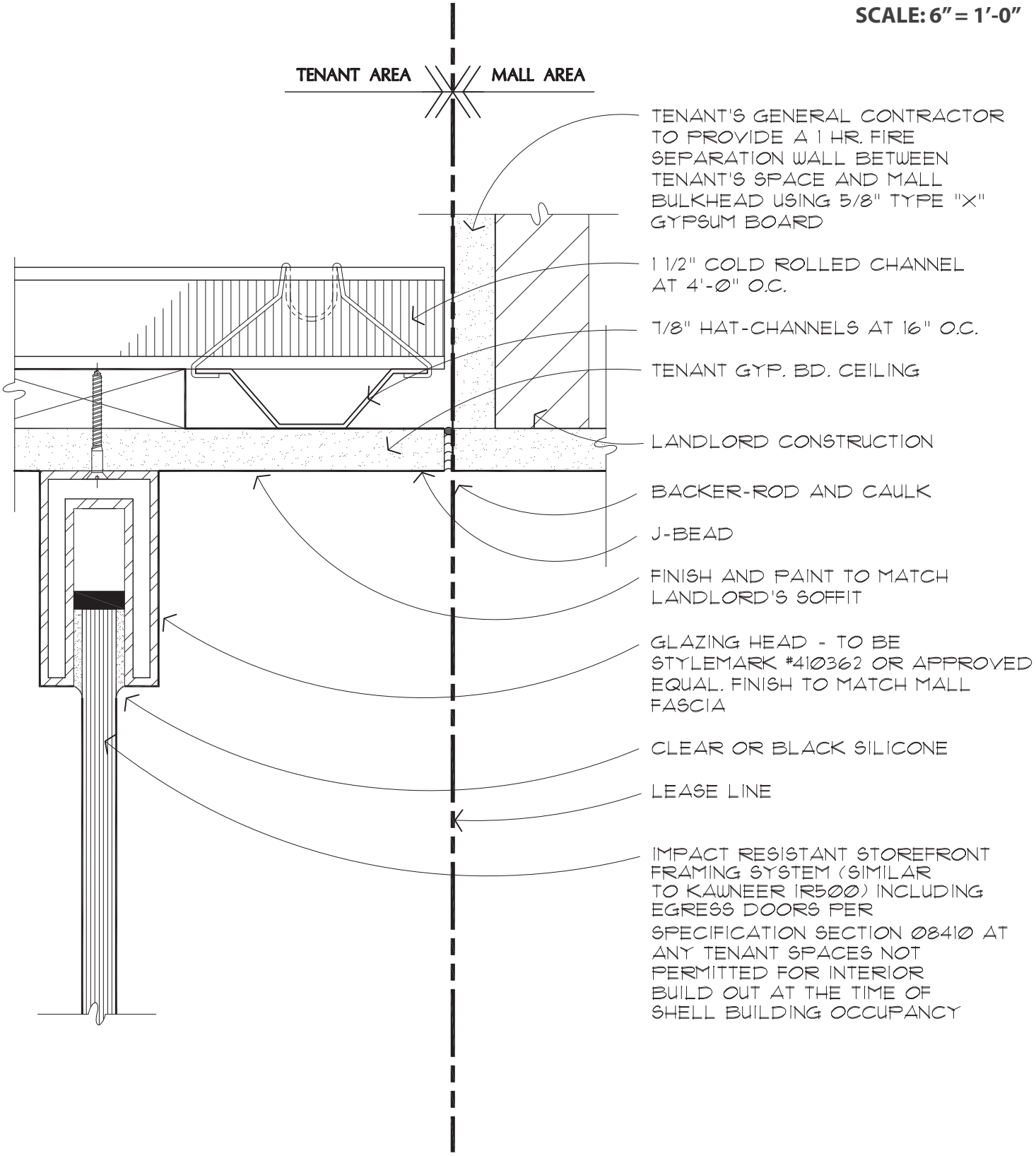

WATERSIDE SHOPS

GLAZING HEAD DETAIL - RECESSED CHANNEL

SCALE: 6" = 1'-0"

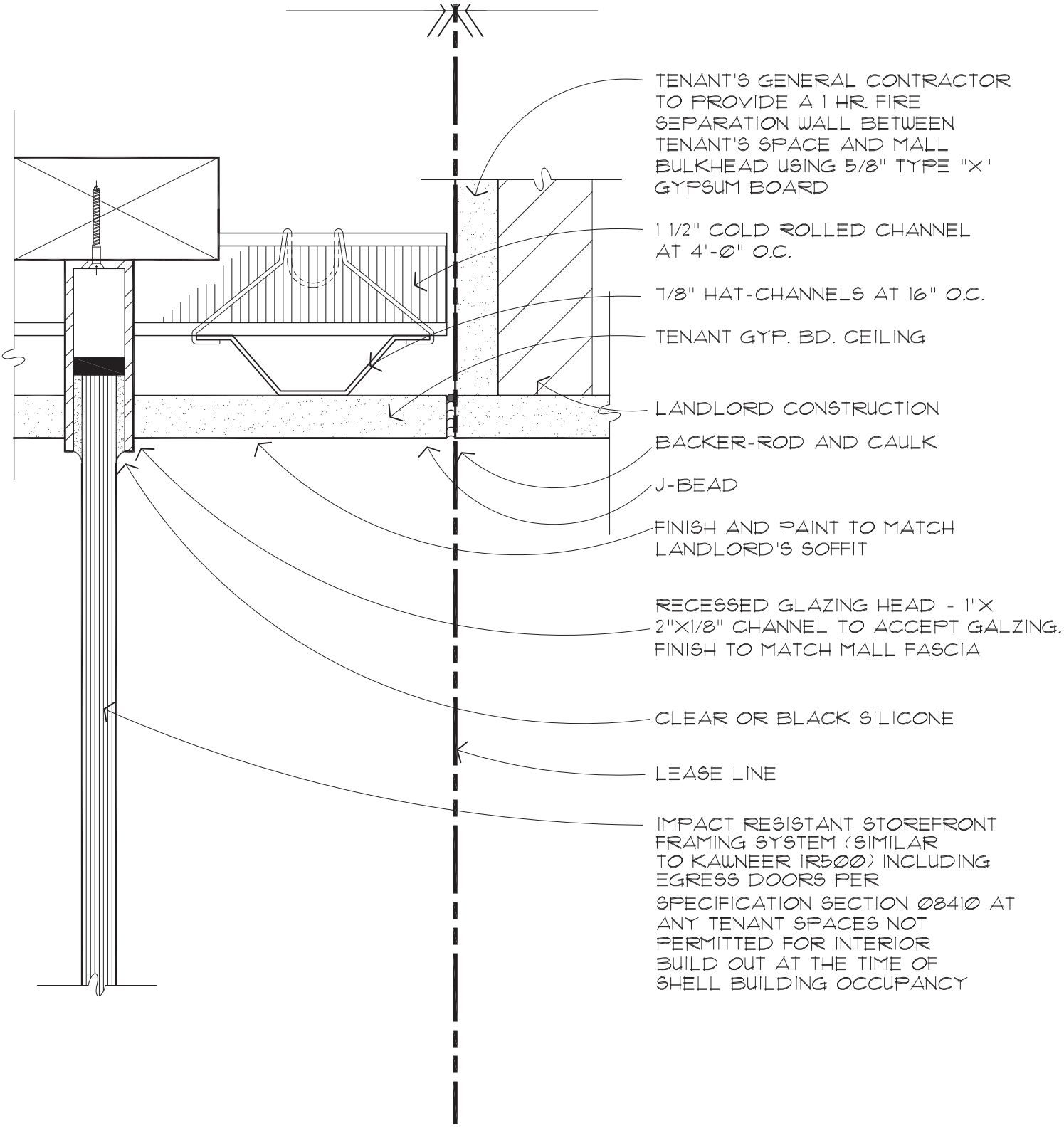

WATERSIDE SHOPS

GLAZING HEAD DETAIL - RECESSED REVERSED CHANNEL SIGN DETAIL

SCALE: 3" = 1'-0"

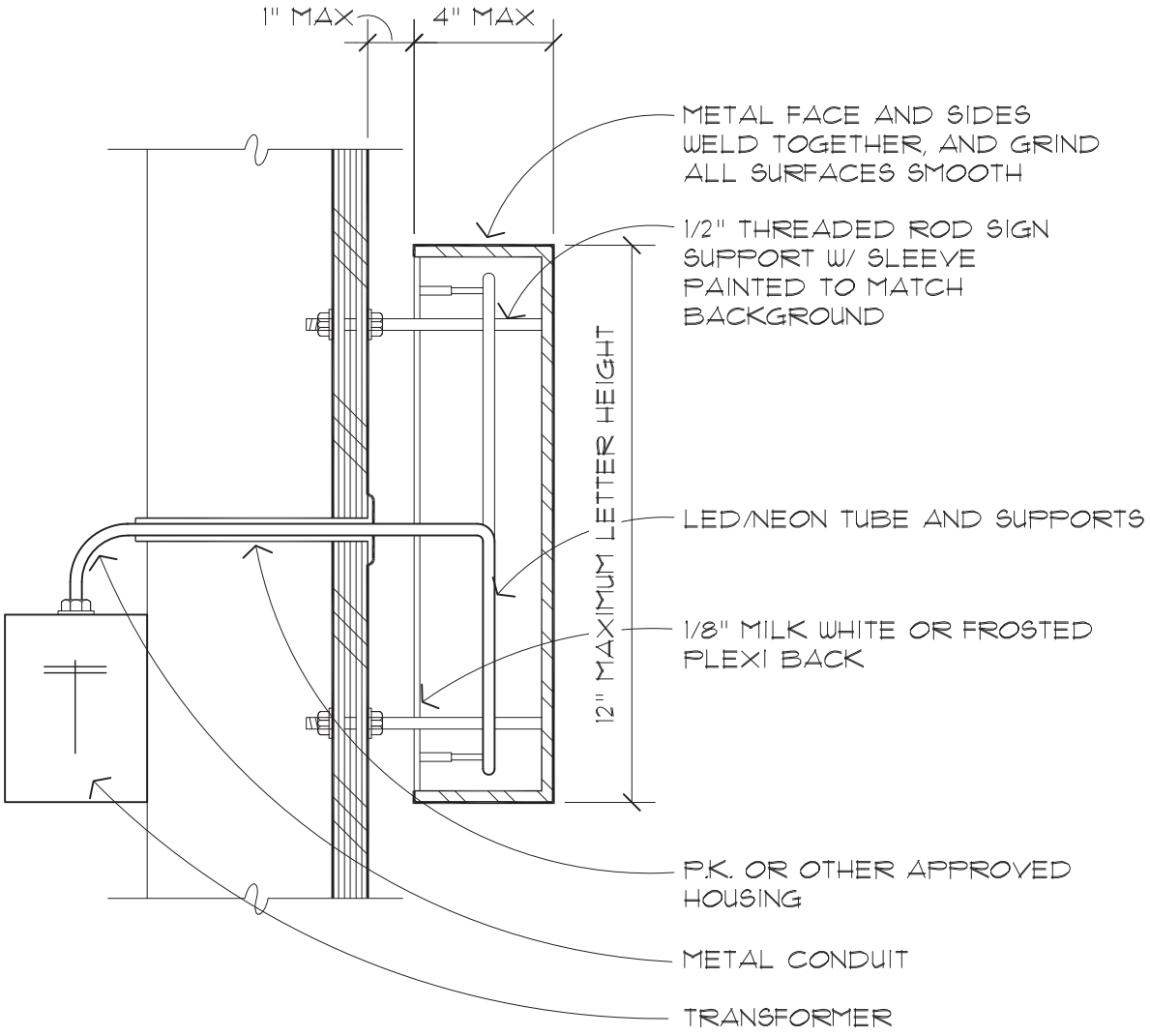

NOTES:

SIGNS TO HAVE:
- NO WEEP HOLES
- NO EXPOSED FASTENERS
- NO VISIBLE STICKERS OR LABELS
- NO VISIBLE SWITCHES

WATERSIDE SHOPS

GLAZING HEAD DETAIL - CHANNEL LETTER SIGN DETAIL

SCALE: 3" = 1'-0"

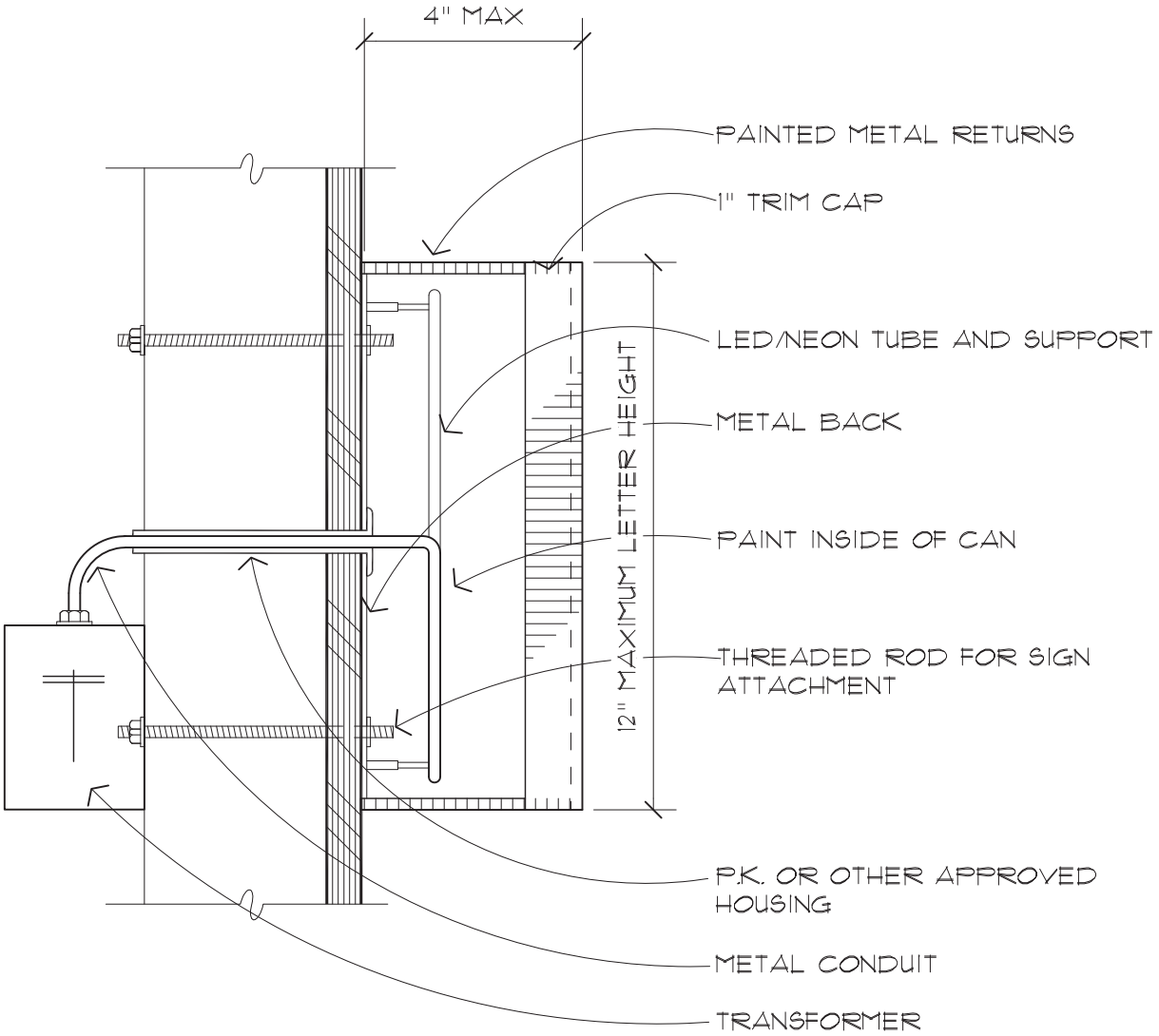

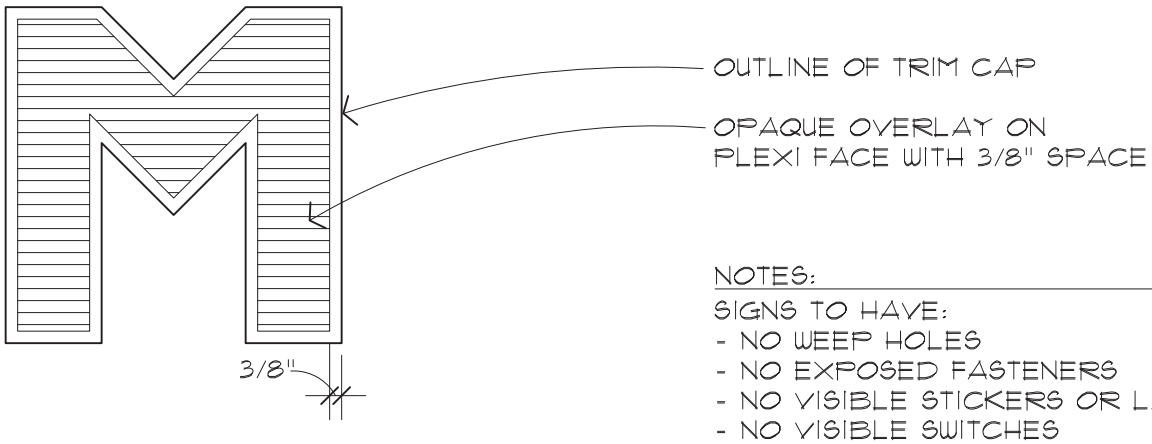

NOTES:

SIGNS TO HAVE:
- NO WEEP HOLES
- NO EXPOSED FASTENERS
- NO VISIBLE STICKERS OR LABELS
- NO VISIBLE SWITCHES

WATERSIDE SHOPS

GLAZING HEAD DETAIL - GLASS JOINT DETAIL

SCALE: FULL

EDGE QUALITY

THE FOLLOWING TOLERANCES ARE USED TO ASSURE HIGH QUALITY SURFACE APPEARANCE AND CONSISTENCY IN EDGE WORK

POLISHED EDGE

A POLISHED EDGE, ALSO REFERRED TO AS A "GROUND AND POLISHED EDGE", IS AVAILABLE FOR ALL GLASS THICKNESS' 1/4" (6MM) AND GREATER. THE EDGES ARE FLAT GROUND, SEAMED, THEN POLISHED TO PRODUCE A GLASS SURFACE CONDITION SIMILAR TO THE SURFACE OF THE GLASS

EDGE CHIPS

EDGE CHIPS SHOULD NOT EXCEED 1/8" (3.18MM) WIDE (A), BY 1/4" (6.35MM) LONG (B). BY 20% OF THE GLASS THICKNESS (C) UNLESS OTHERWISE SPECIFIED.

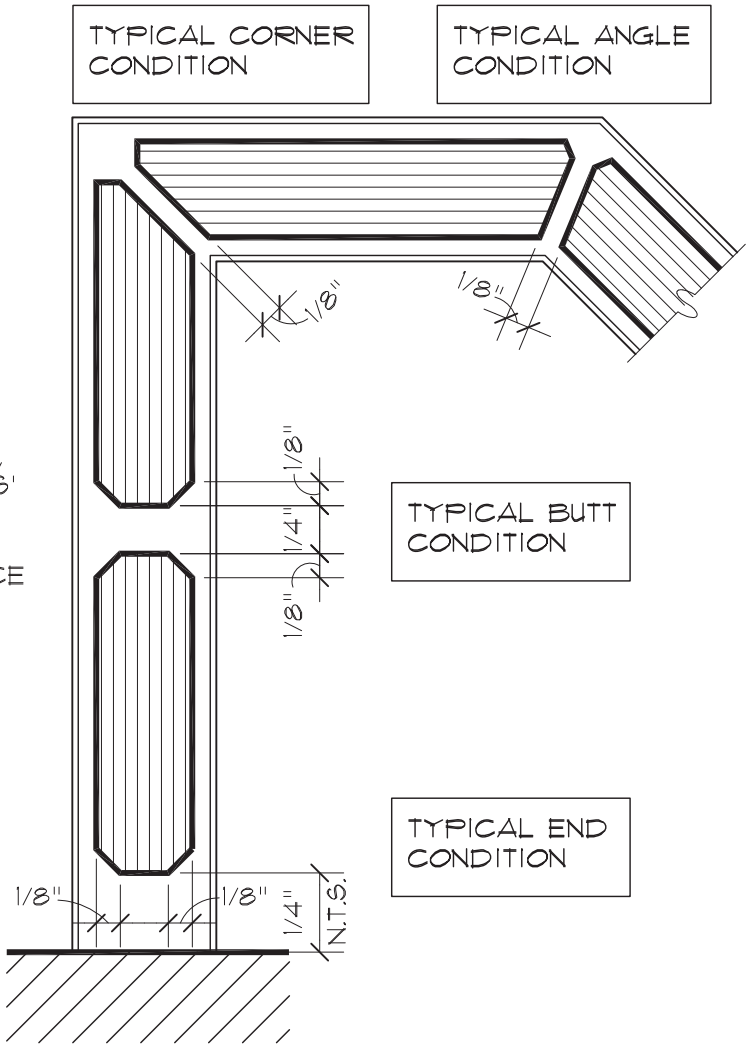

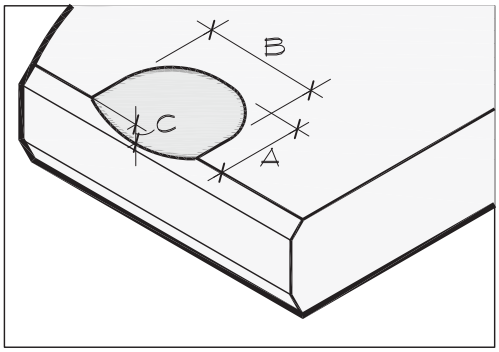

IMPACT RESISTANT STOREFRONT FRAMING SYSTEM (SIMILAR TO KAWNEER IR500) INCLUDING EGRESS DOORS PER SPECIFICATION SECTION 08410 AT ANY TENANT SPACES NOT PERMITTED FOR INTERIOR BUILD OUT AT THE TIME OF SHELL BUILDING OCCUPANCY

WATERSIDE SHOPS

GLAZING HEAD DETAIL - SAMPLE GLAZING CLIP DETAIL

SCALE: 3" = 1'-0"

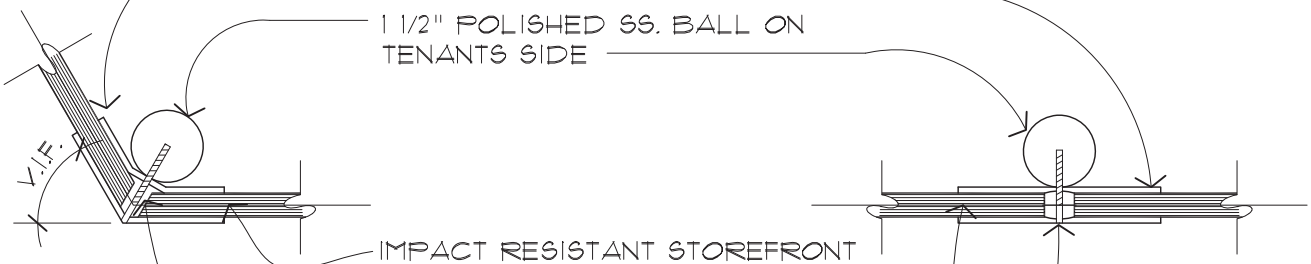

1/8" POLISHED STAINLESS STEEL GLAZING CLIPS WITH RELIEVED EDGES

1 1/2" POLISHED SS. BALL ON TENANTS SIDE

IMPACT RESISTANT STOREFRONT FRAMING SYSTEM (SIMILAR TO KAWNEER IR500) INCLUDING EGRESS DOORS PER SPECIFICATION SECTION 08410 AT ANY TENANT SPACES NOT PERMITTED FOR INTERIOR BUILD OUT AT THE TIME OF SHELL BUILDING OCCUPANCY

ANGLED TENANT SIDE

STRAIGHT MALL SIDE

3/16" THREADED STUD BRAZED TO MALL SIDE PLATE FOR BALL ATTACHMENT ON TENANT'S SIDE

NOTE

SHAPE AND FINISH OF GLAZING CLIP TO BE DESIGNED INTEGRAL WITH TENANT'S STOREFRONT

NOTE

BREAK LINES TO MATCH ANGLE OF STOREFRONT AS REQUIRED - REFER TO DETAILS BELOW FOR APPROXIMATE CONFIGURATION. FIELD MEASURE ALL ANGLES PRIOR TO FABRICATION.

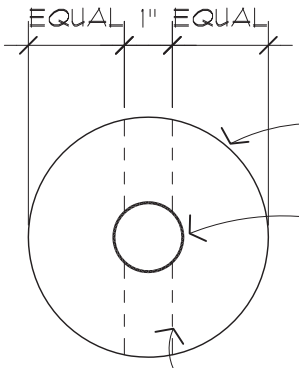

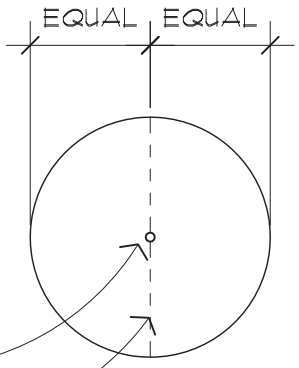

1/8" POLISHED STAINLESS STEEL GLAZING CLIPS WITH RELIEVED EDGES.

1 1/2" POLISHED SS. BALL ON TENANTS SIDE

3/16" THREADED STUD BRAZED TO MALL SIDE PLATE FOR BALL ATTACHMENT ON TENANT'S SIDE

BREAK LINES (WHERE APPLICABLE) SEE NOTE ABOVE.

TENANT SIDE

MALL SIDE

NOTE

SHAPE AND FINISH OF GLASS CLIP SHALL COMPLIMENT THE TENANT STOREFRONT DESIGN. ITEMS SHOWN ARE FOR EXAMPLE ONLY.

WATERSIDE SHOPS

GLAZING HEAD DETAIL - TYPICAL NAME/ LOGO ON GLASS

SCALE: 3/4" = 1'-0"

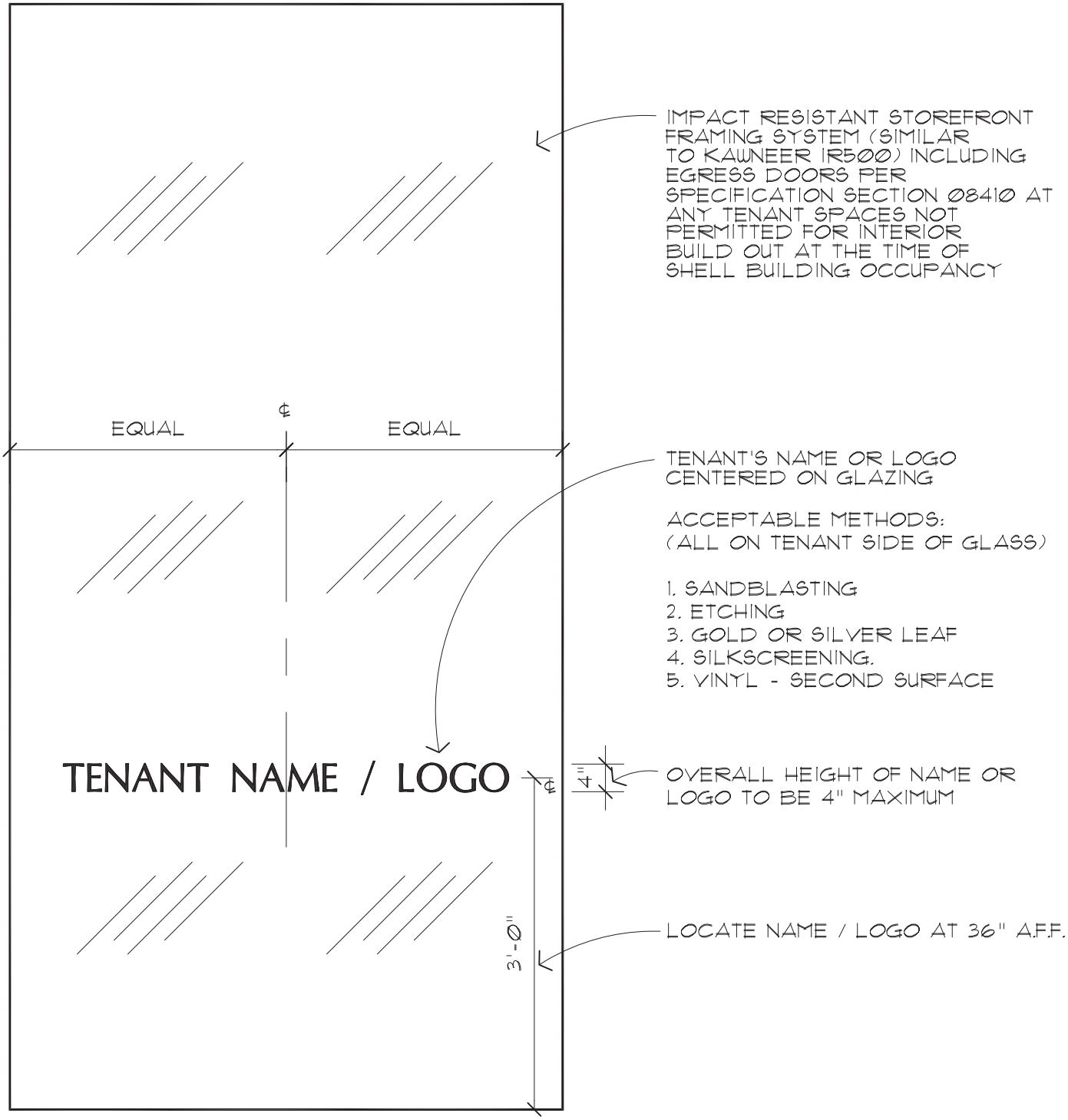

WATERSIDE SHOPS

DETAIL AT CARPET/ TILE TRANSITION

SCALE: FULL

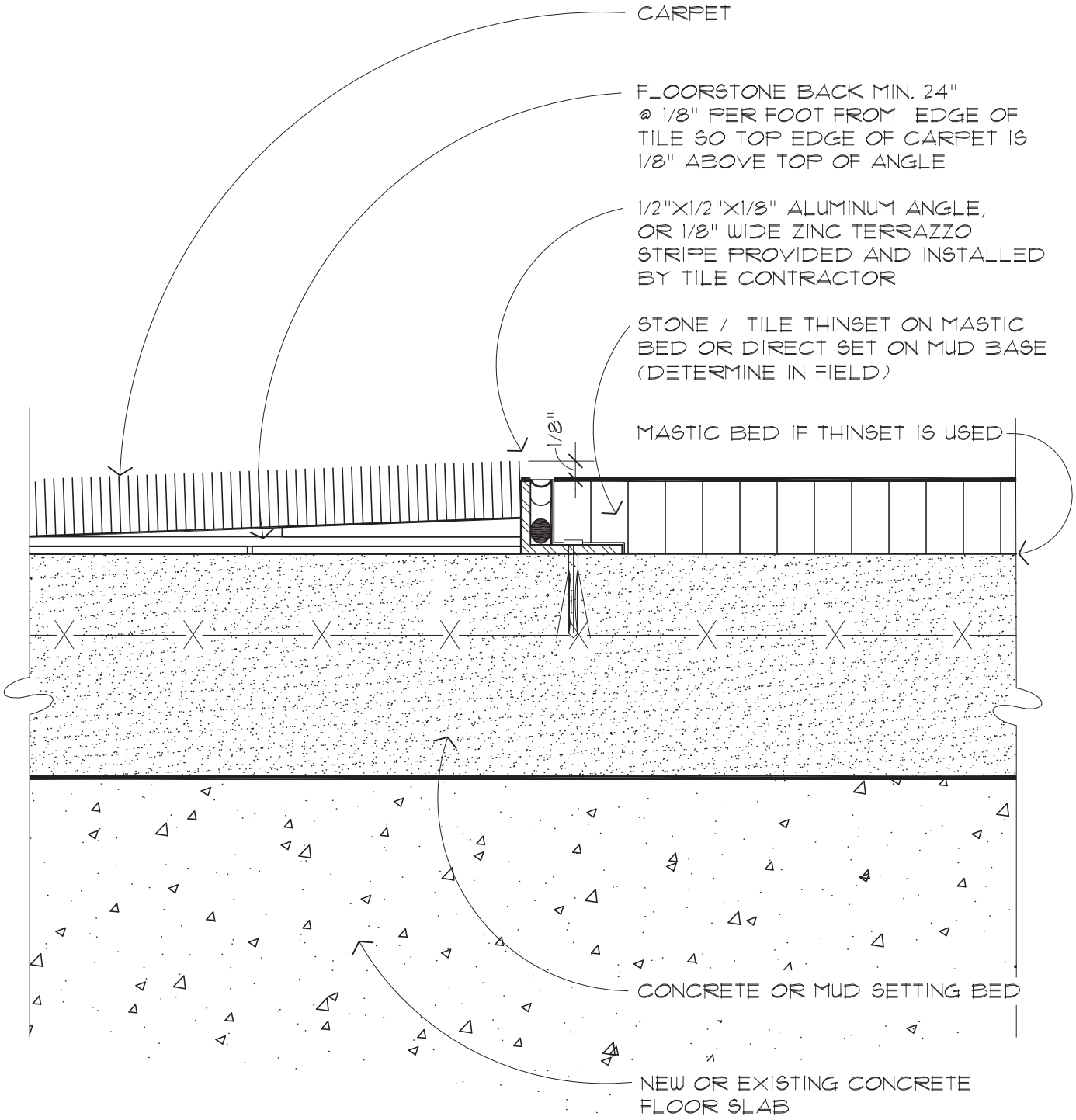

WATERSIDE SHOPS

FLUSH TYPE GYP. BD. CEILING ACCESS HATCH

SCALE: 6" = 1'-0"

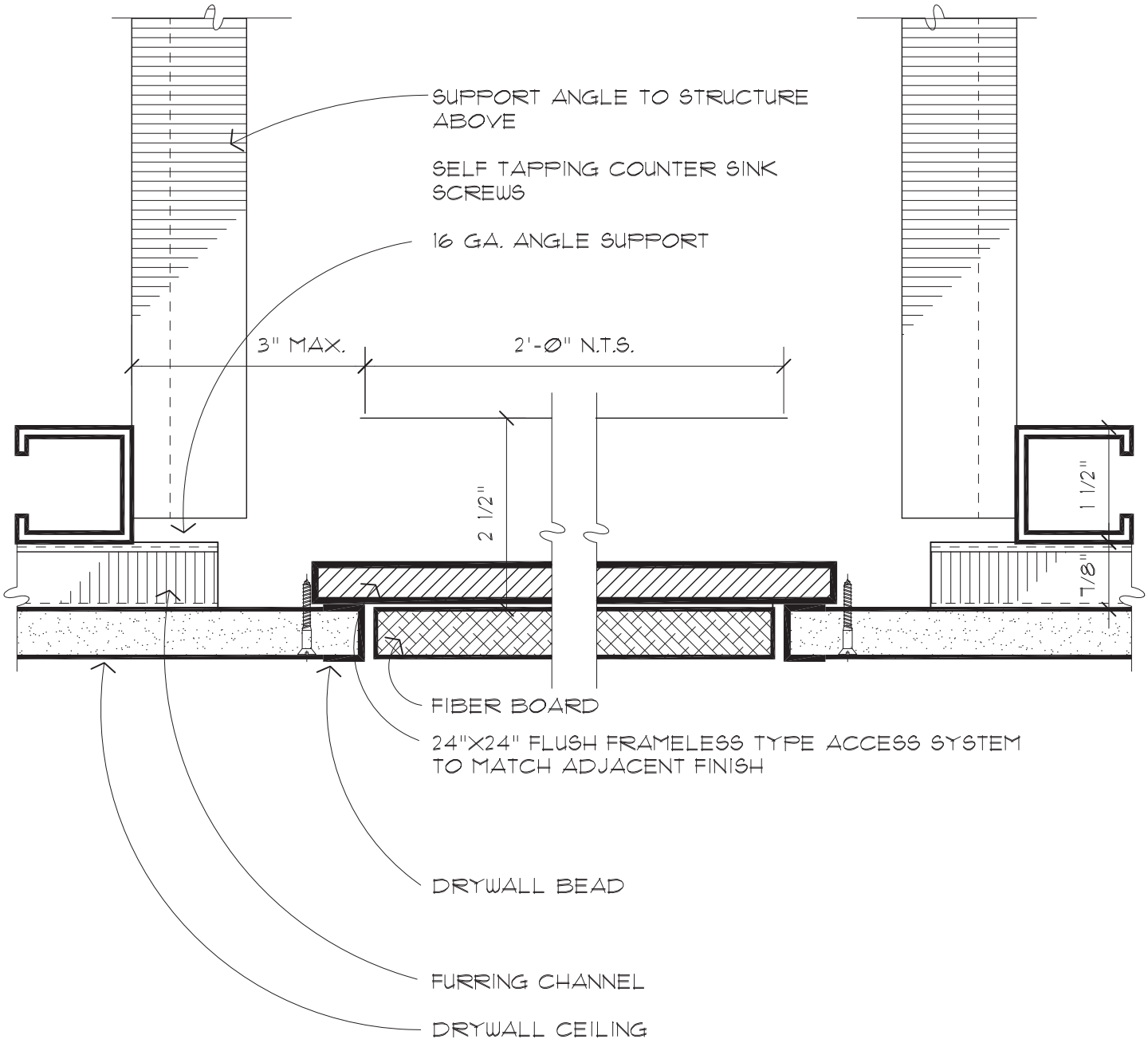

WATERSIDE SHOPS

RECESSED MOUNTED STANDARD

SCALE: 6" = 1'-0"

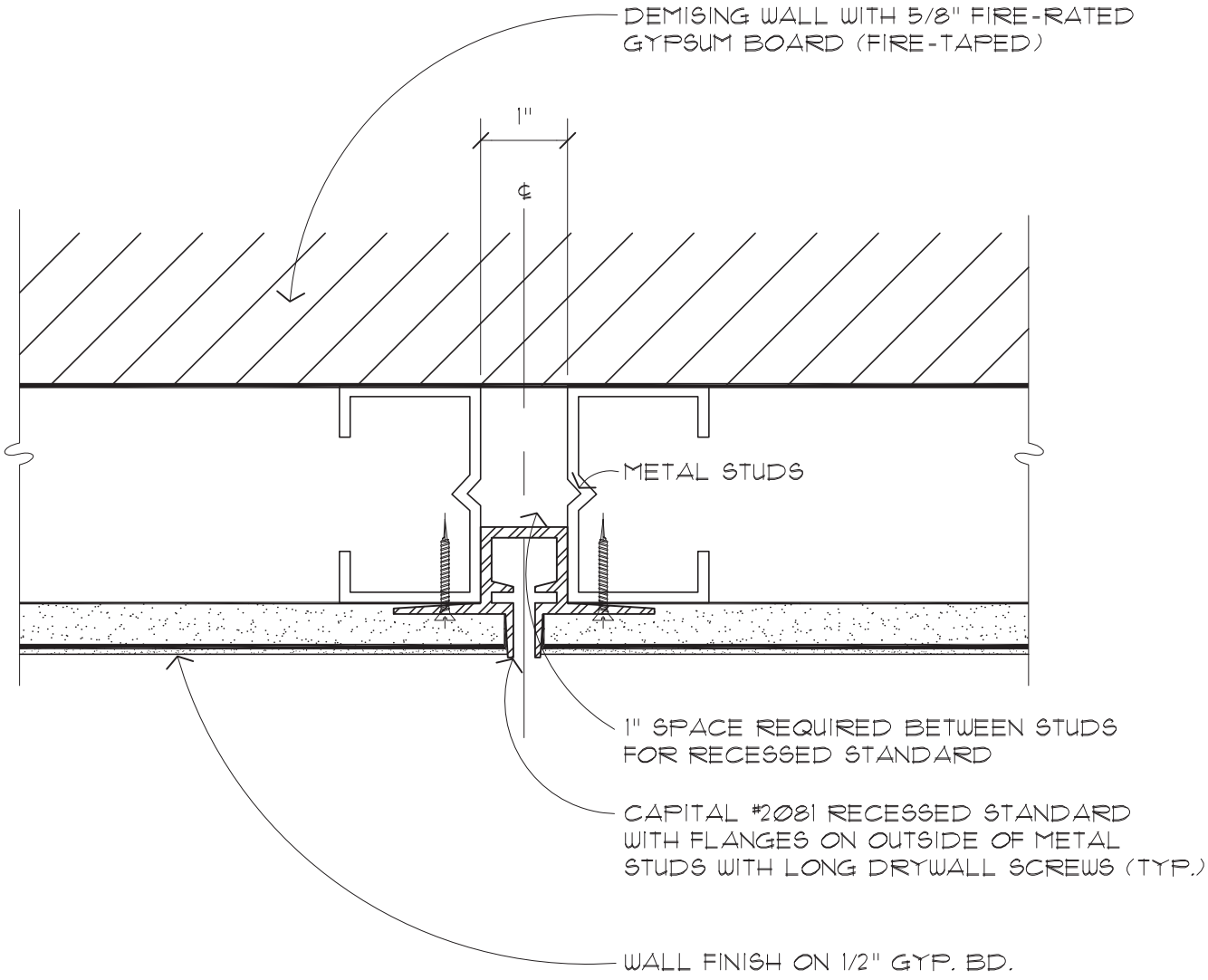

SALES AREA

WATERSIDE SHOPS

TYPICAL BARRIER FREE FITTING ROOM PLAN

SCALE: 1/2" = 1'-0"

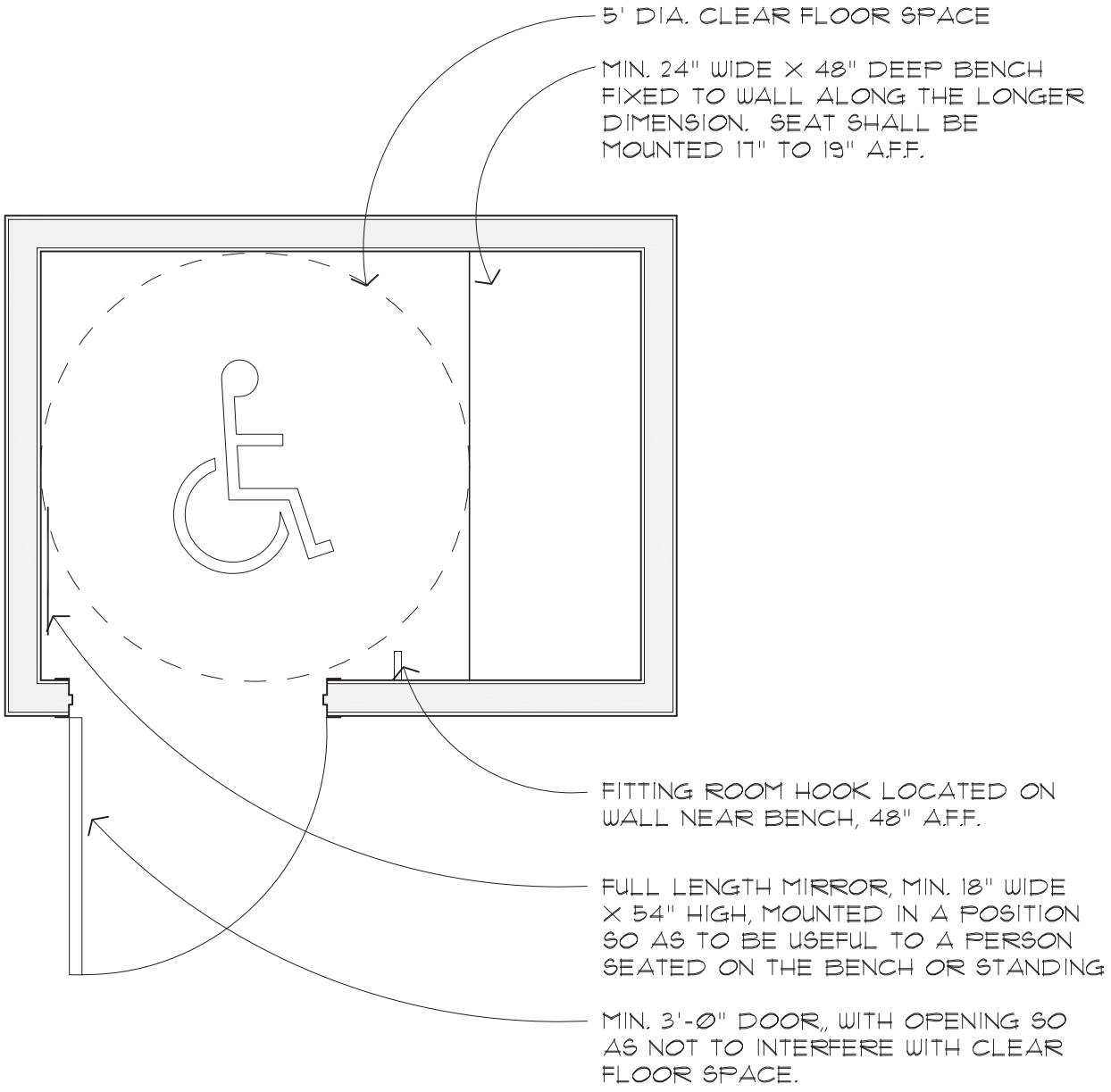

WATERSIDE SHOPS

FITTING ROOM BENCH DETAIL

SCALE: 1 1/2" = 1'-0"

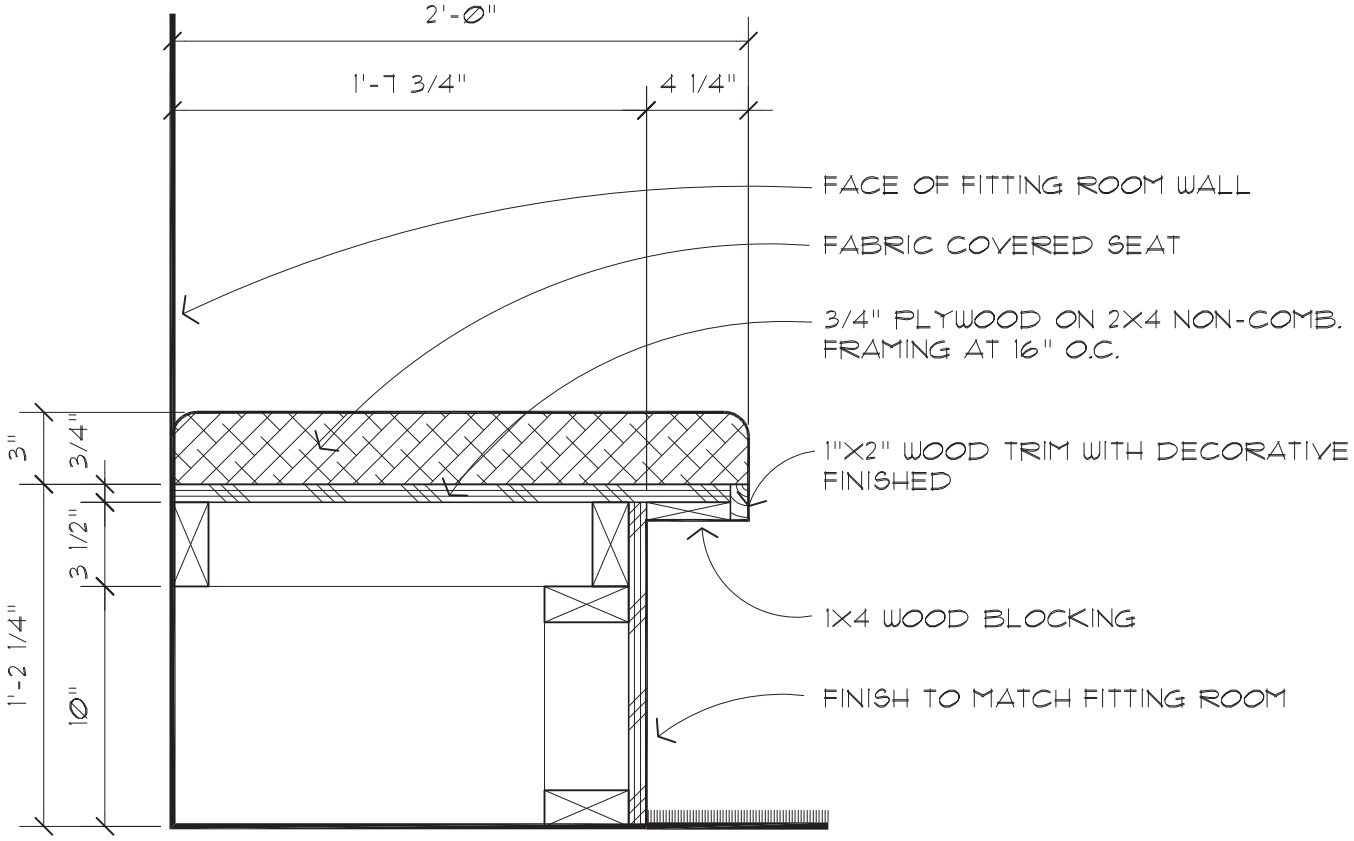

NOTE:
DIMENSIONS TO CONFORM TO ALL CURRENT A.D.A. REQUIREMENTS.

WATERSIDE SHOPS

TRANSITION BETWEEN CARPET AND VINYL TILE

SCALE: FULL

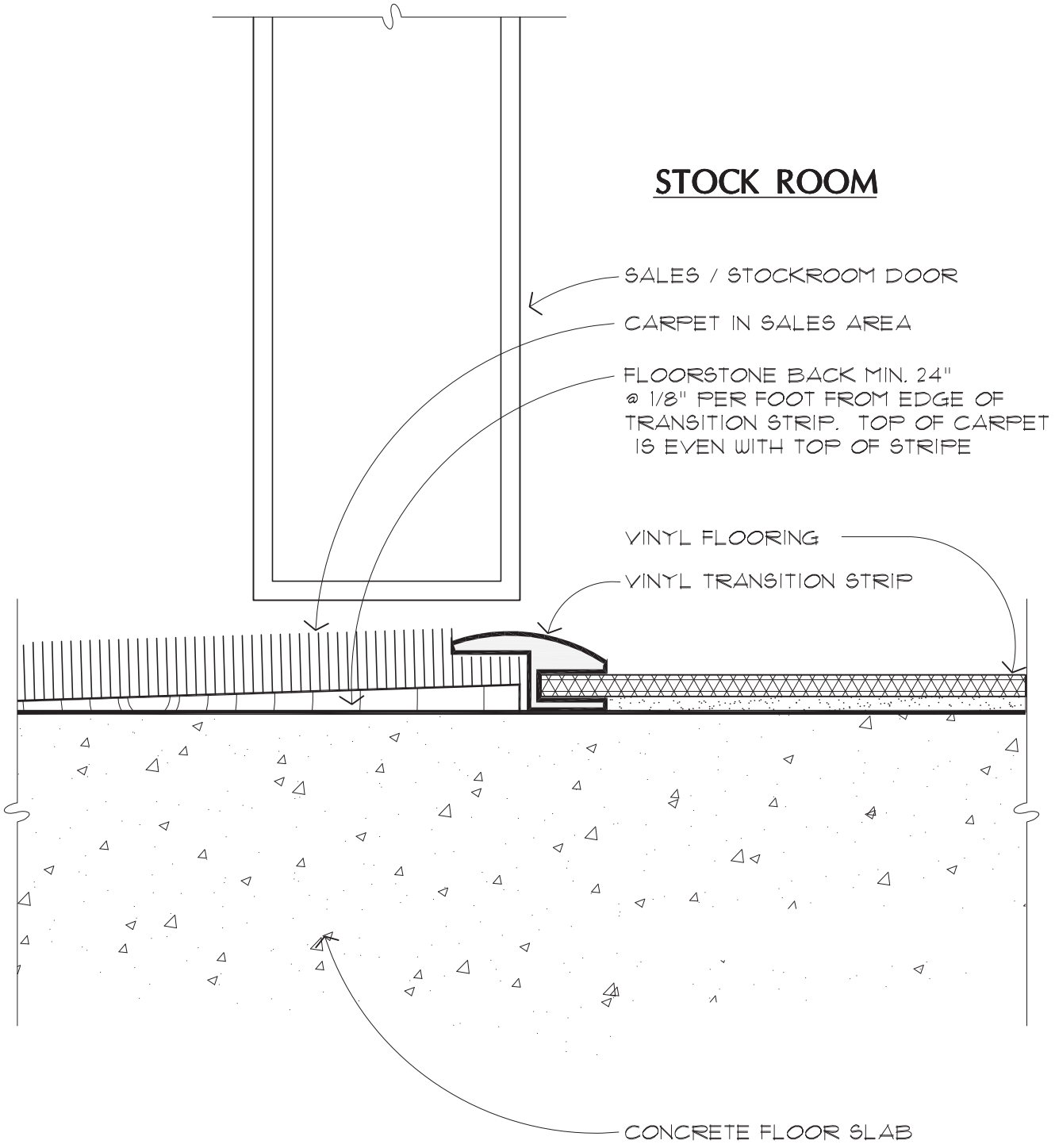

WATERSIDE SHOPS

MARBLE THRESHOLD AT TOILET ROOM

SCALE: FULL

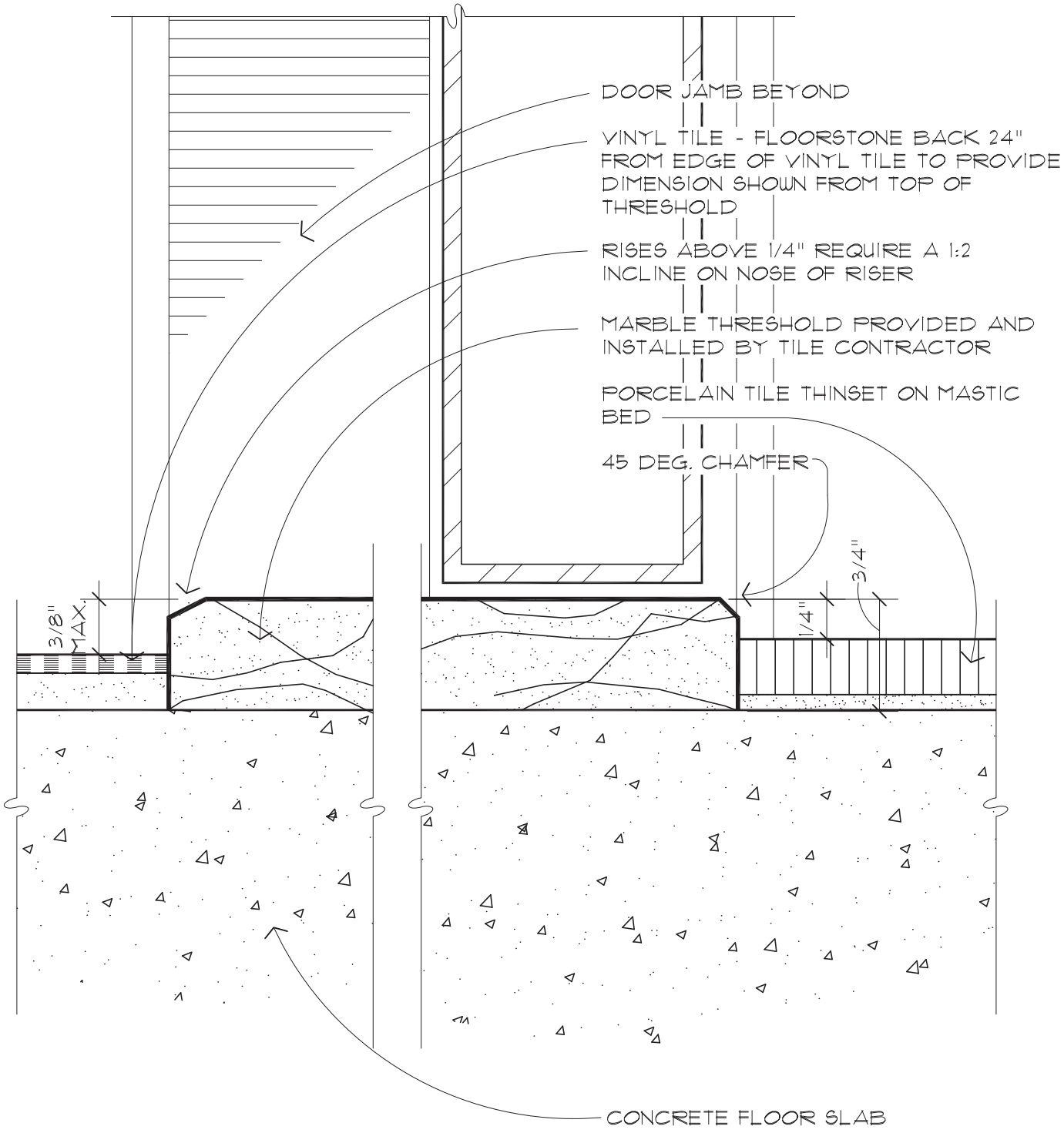

WATERSIDE SHOPS

TYPICAL PLATFORM ABOVE TOILET ROOM

SCALE: 3" = 1'-0"

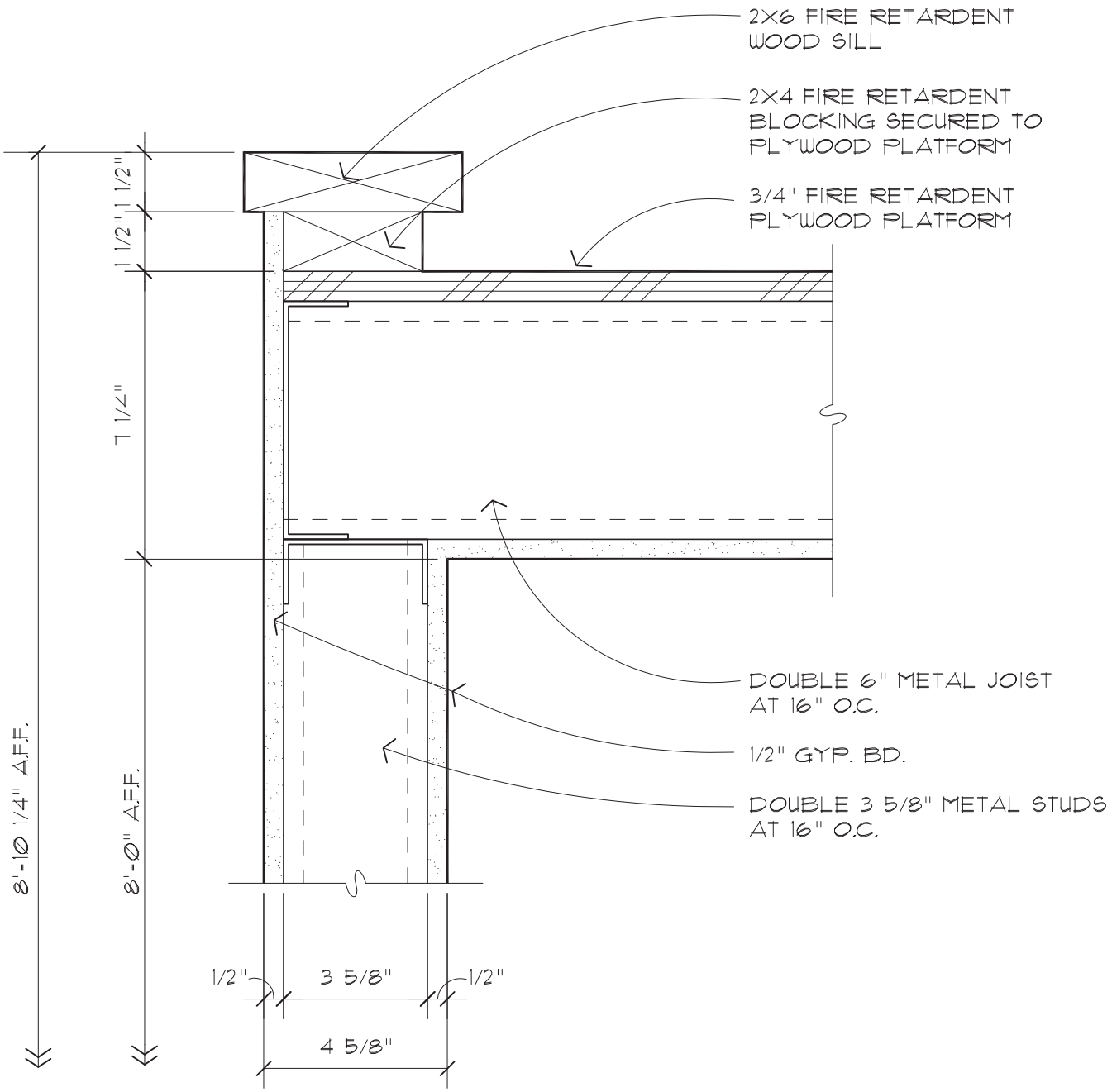

STOCK ROOM

TOILET ROOM

WATERSIDE SHOPS

TYPICAL TOILET ROOM PLAN

SCALE: 1/2" = 1'-0"

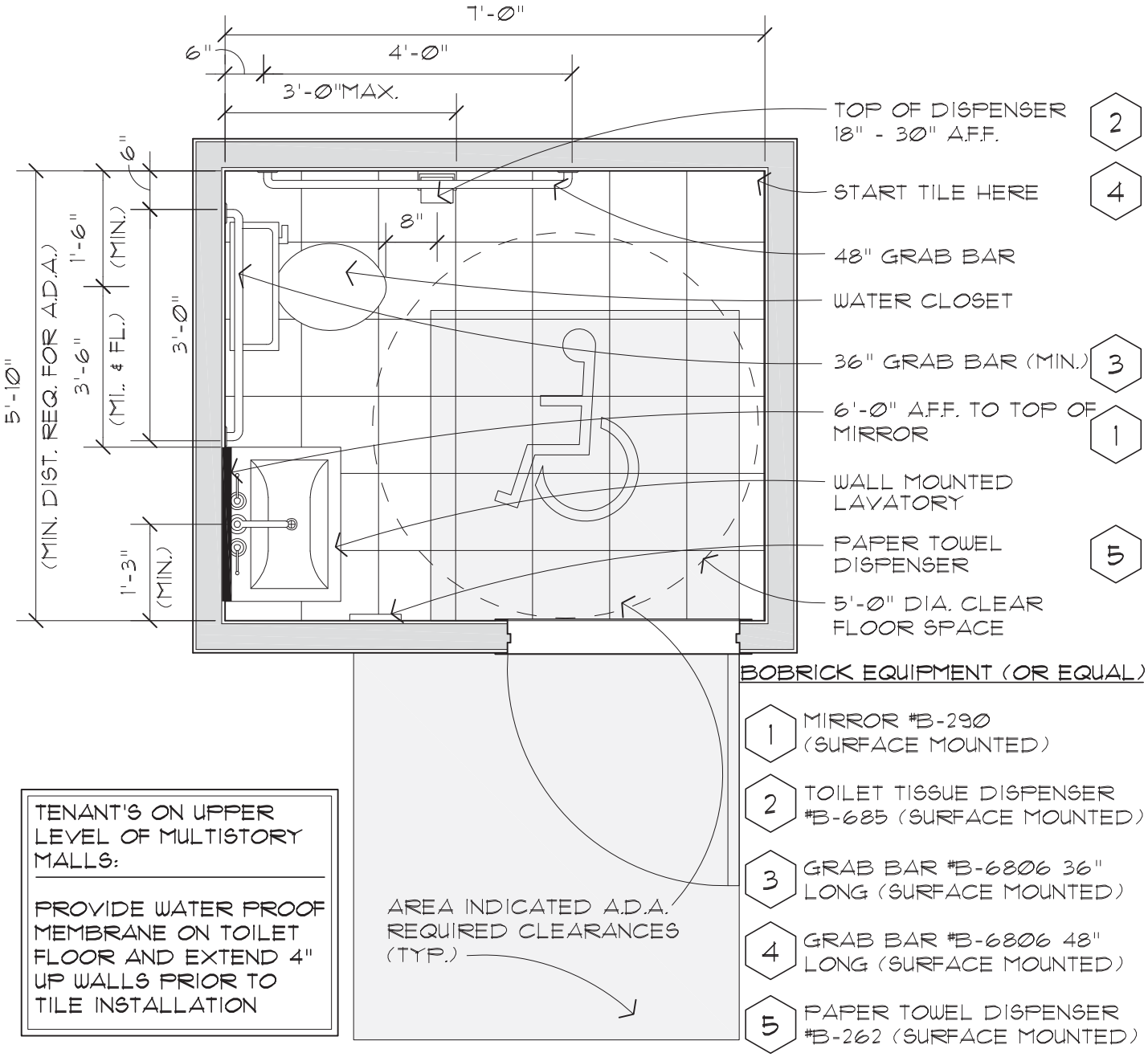

BOBRICK EQUIPMENT (OR EQUAL)

1. MIRROR #B-290 (SURFACE MOUNTED)
2. TOILET TISSUE DISPENSER #B-685 (SURFACE MOUNTED)
3. GRAB BAR #B-6806 36" LONG (SURFACE MOUNTED)
4. GRAB BAR #B-6806 48" LONG (SURFACE MOUNTED)
5. PAPER TOWEL DISPENSER #B-262 (SURFACE MOUNTED)

TENANT'S ON UPPER LEVEL OF MULTISTORY MALLS:

PROVIDE WATER PROOF MEMBRANE ON TOILET FLOOR AND EXTEND 4" UP WALLS PRIOR TO TILE INSTALLATION

GENERAL NOTES:

ALL TOILET ROOM ACCESSORIES SUCH AS TOWEL AND TOILET TISSUE DISPENSERS SHALL BE MOUNTED SO THAT THE CENTER OF DISPENSER OPENING OR CONTROL IS NO HIGHER THAN 40" A.F.F.

GRAB BARS SHALL WITHSTAND A MINIMUM LOAD OF 250#

TOILET ROOM(S) SHALL COMPLY WITH STATE BARRIER FREE CODE AS WELL AS ALL FEDERAL AND LOCAL CODES. INCLUDING A.D.A.

WATERSIDE SHOPS

TYPICAL TOILET ROOM ELEVATION

SCALE: 1/2" = 1'-0"

NOTES: HANDICAPPED ACCESS

1. WATER CLOSET TO BE PROVIDED WITH AN OSCILLATING FLUSH CONTROL HANDLE. OPERATING AT NOT GREATER THAN 5 LB. FORCE AND WITHOUT EXCESSIVE BODY MOVEMENT.

2. LAVATORY TO BE PROVIDED WITH FAUCET CONTROLS OPERABLE WITH ONE HAND AND NOT REQUIRING GRASPING, PINCHING OR TWISTING.

3. LAVATORY TO BE PROVIDED WITH NO ABRASIVE SURFACES UNDERNEATH.

4. GRAB BARS TO HAVE A 1 1/4" TO 1 1/2" CROSS SECTION MOUNTED 33" A.F.F. PROVIDE 1 1/2" CLEARANCE BETWEEN BAR AND WALL. BAR MUST SUPPORT 250 LBS. MIN.

5. PROVIDE RESTROOM DOOR SIGNAGE. MOUNT SIGN AT MIN. OF 5'-0" A.F.F. AND MAX. OF 8'-0" A.F.F.

TOILET ROOM(S) SHALL COMPLY WITH STATE BARRIER FREE CODE AS WELL AS ALL FEDERAL AND LOCAL CODES. INCLUDING A.D.A.

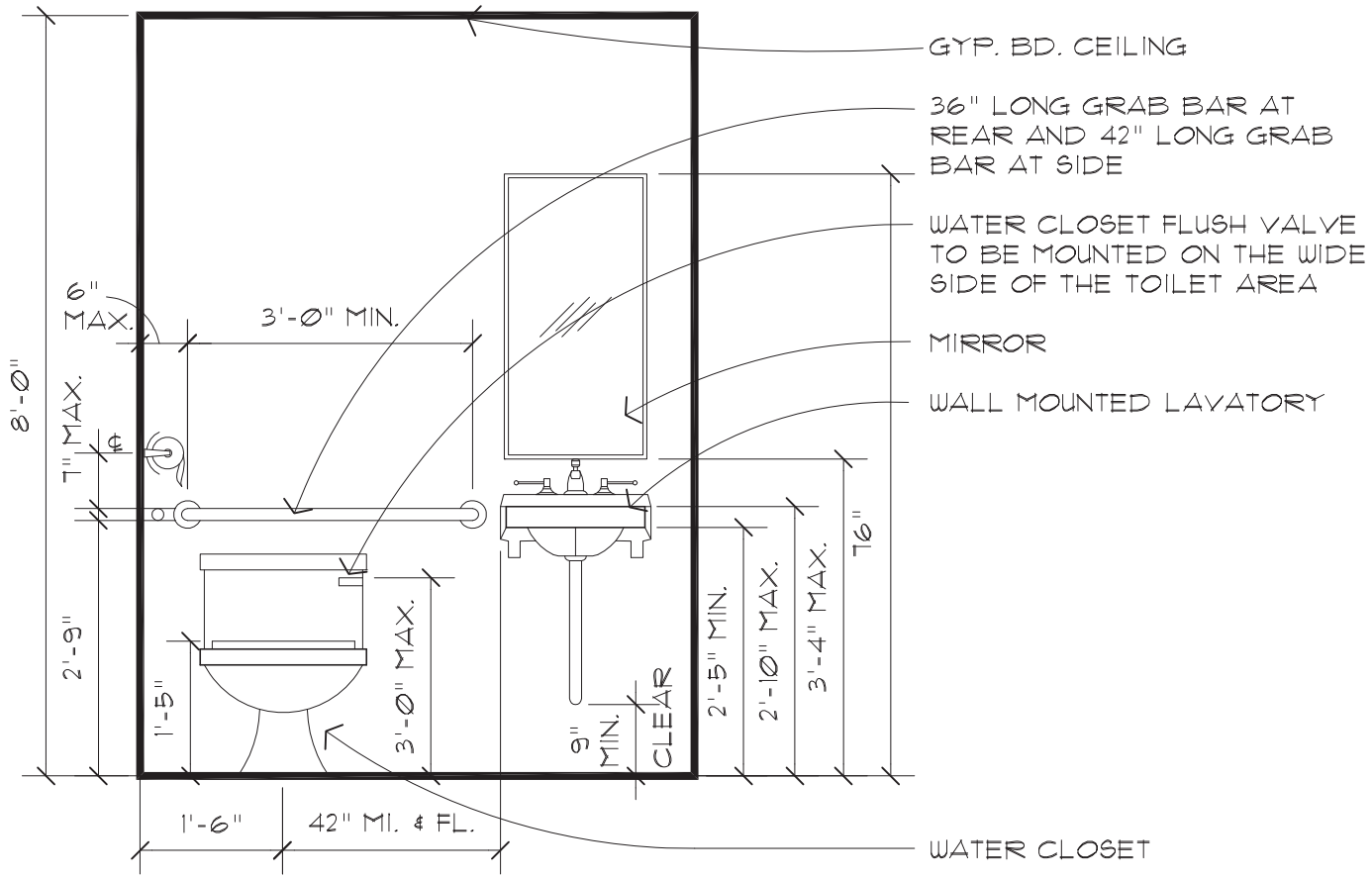

WATERSIDE SHOPS

TYPICAL TOILET ROOM ELEVATION

SCALE: 1/2" = 1'-0"

TOILET ROOM(S) SHALL COMPLY WITH STATE BARRIER FREE CODE AS WELL AS ALL FEDERAL AND LOCAL CODES. INCLUDING A.D.A.

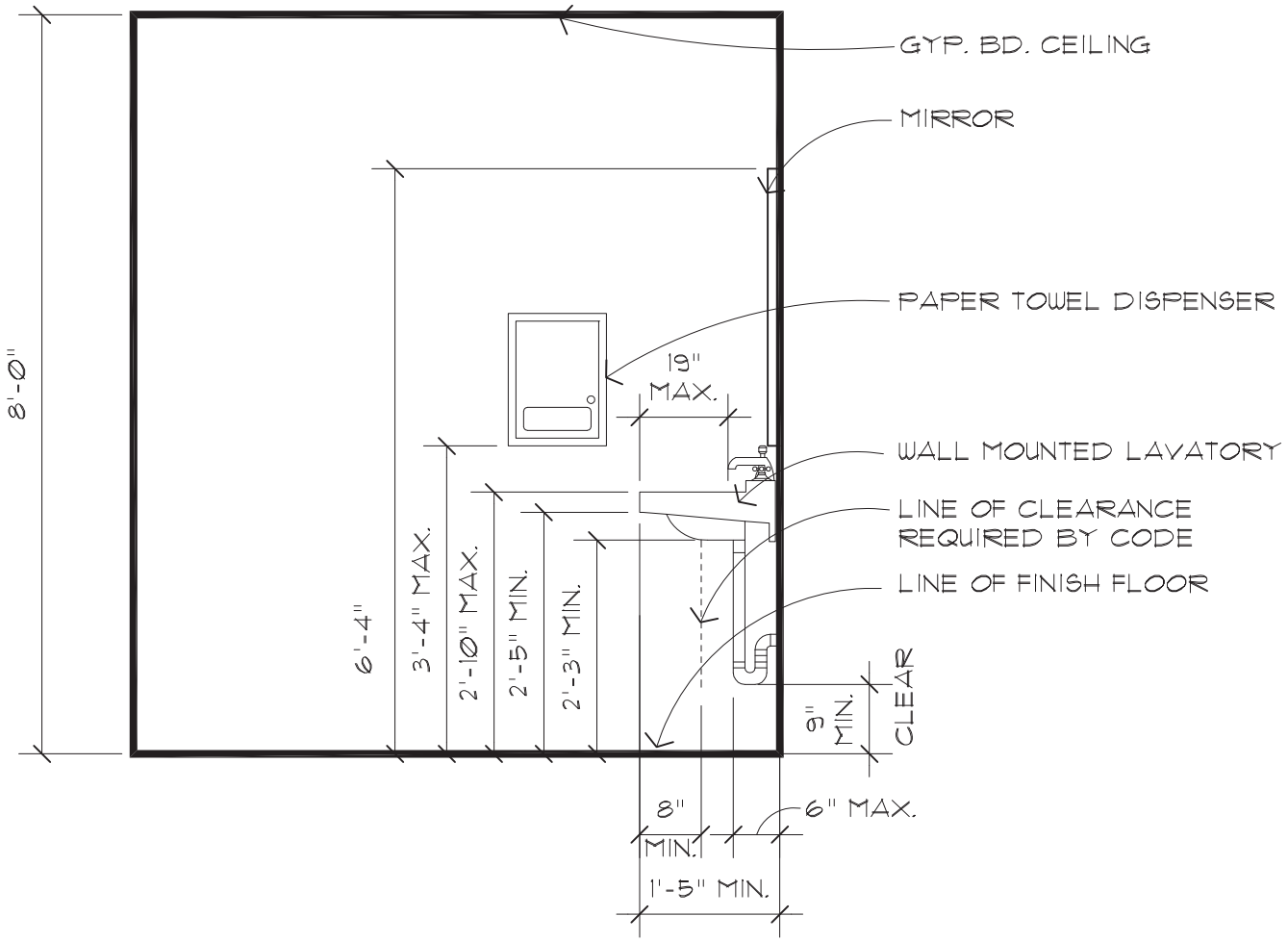

WATERSIDE SHOPS

REAR SERVICE DOOR

SCALE: 1/2" = 1'-0"

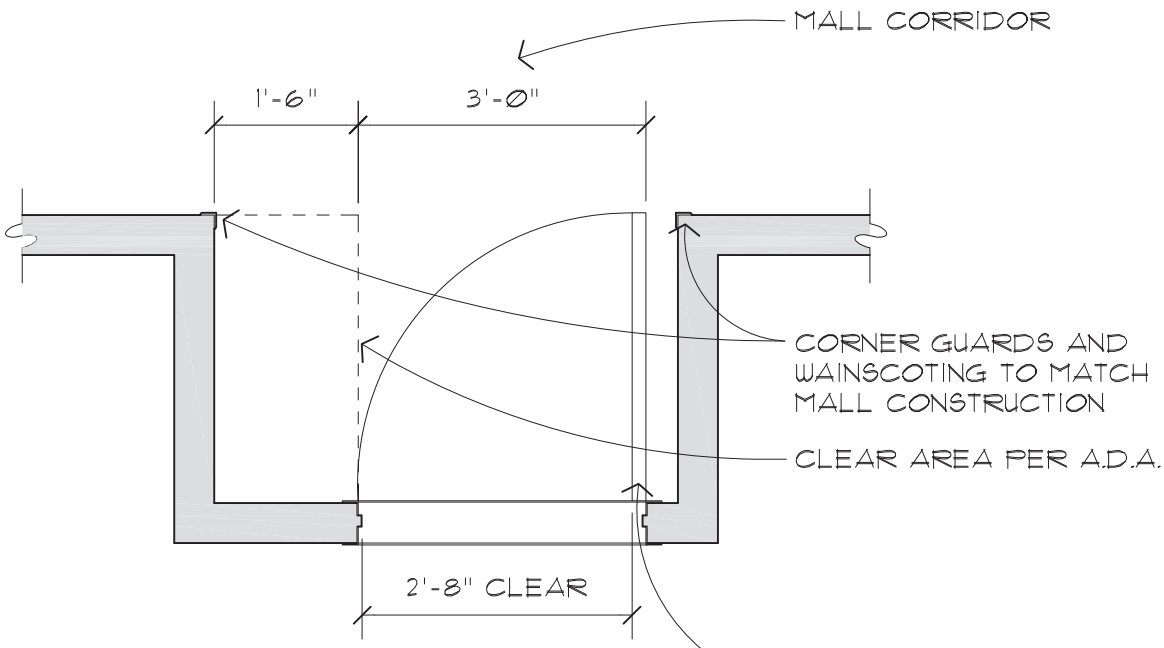

PLAN VIEW

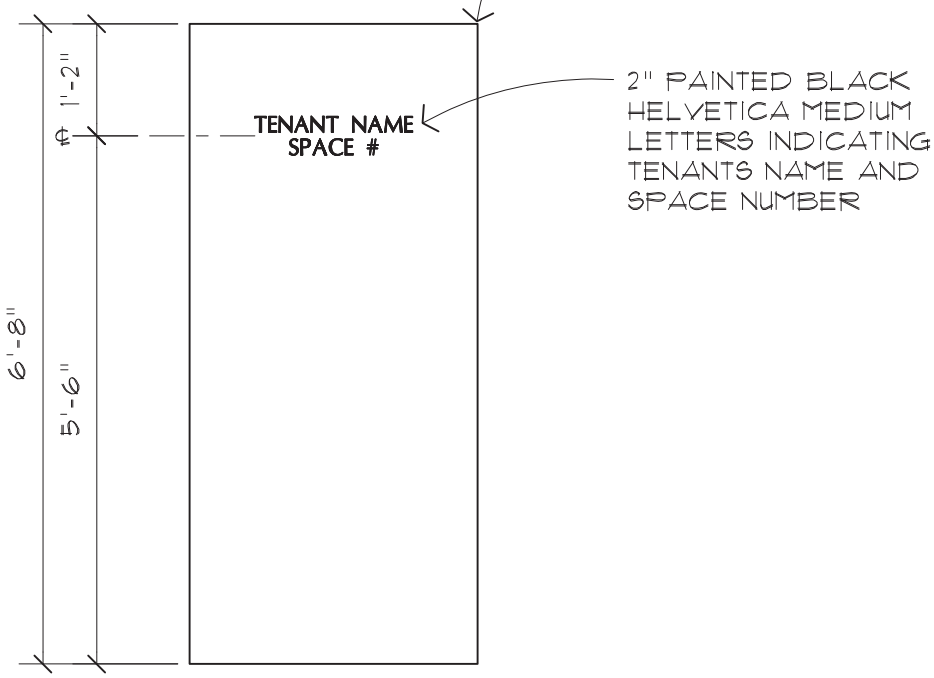

ELEVATION